THE CORPORATION OF THE CITY OF VERNON
REPORT TO COUNCIL

SUBMITTED BY: Matt Faucher, Current Planner

COUNCIL MEETING: REG ☒ COW ☐ I/C ☐
COUNCIL MEETING DATE: May 27, 2024
REPORT DATE: May 14, 2024
FILE: 6450 – Zoning Bylaw 6000

SUBJECT: CONSIDERATION OF ZONING BYLAW 6000

PURPOSE:

To approve the new Zoning Bylaw 6000 to address the legislative requirements of Bill 44 Housing Statutes (Residential Development) and Bill 47 Housing Statutes (Transit-Oriented Areas).

RECOMMENDATION:

THAT Council receive for information the report titled "Consideration of Zoning Bylaw 6000" dated May 14, 2024, and respectfully submitted by the Current Planner;

AND FURTHER, that Zoning Bylaw 6000 (Attachment 2) be read a 1st and 2nd time;

AND FURTHER, that a public hearing be scheduled for Zoning Bylaw 6000 on June 10, 2024.

ANALYSIS:

A. Committee Recommendations:

N/A

B. Rationale:

1. Background

In April 2023, the Province released its Homes For People Action Plan. The plan focuses on four priorities:

- Unlocking more homes faster;
- Delivering better and more affordable homes;
- Helping those with the greatest housing need; and
- Creating a housing market for people, not speculators.

Since announcement of the plan, the Province has enacted a number of legislative amendments to support its implementation. Zoning Bylaw 6000 focuses on implementation of three pieces of legislation:

- Bill 35: Short-Term Rentals Accommodations Act;
- Bill 44: Housing Statutes (Residential Development); and
- Bill 47: Housing Statutes (Transit-Oriented Areas).

Additionally, the Province has provided the following policy manuals that local governments must consider when developing regulations to implement the requirements of Bills 44 and 47:

- Small-Scale, Multi-Unit Housing Policy Manual
- Transit Oriented Development Areas Policy Manual

At its regular meeting of January 22, 2024, Council passed a resolution directing Administration to prepare a new zoning bylaw to implement the regulatory changes required by the new legislation.

2. Zoning Bylaw 5000

Zoning Bylaw 5000 was adopted on July 26, 2004. The bylaw contains a substantial number of residential and mixed-use zones that will be impacted by the Small Scale Multi Unit Housing and Transit Oriented Development Area legislation. Based on review of the legislation against Zoning Bylaw 5000, and given the significant departure the new legislation requires from the current zoning framework, Administration has concluded that amending Zoning Bylaw 5000 to be compliant with the legislation would be highly problematic leading to potential errors, inconsistencies or non-compliance issues and would be challenging to administer moving forward. The scale of the changes required by the new legislation is substantial, particularly with the tight deadline of June 30, 2024, to achieve compliance.

3. Zoning Bylaw 6000

To meet the timelines set by the province for implementing the requirements of the new housing legislation, the City will be taking a three-phase approach to Zoning Bylaw 6000:

1. **Design:** Create Zoning Bylaw 6000, incorporating the new Provincial housing legislation. Completion by Summer 2024

2. **Refine:** Update sections not covered by the Provincial housing legislation, review feedback from the community, correct potential errors or unintended outcomes created by the changes. Summer 2024 to Summer 2025

3. **Align:** Update Zoning Bylaw 6000 to reflect the Official Community Plan (OCP), Transportation Plan (TP) and Housing Needs Report to ensure zoning supports the City's growth over the next 20 years. Summer 2025 through the end of 2025

The Province has established June 30, 2024 as the date that all zoning bylaws throughout the province must comply with the new housing legislation. The implications of this timeline for the City meant that Administration was provided with three months to completely redesign the City's zoning framework to implement the legislative requirements, address ripple effects created by the legislation, apply the new zones to properties throughout the City, address anomalies and historical challenges from Zoning Bylaw 5000, as well as complete a legal review of the new Zoning Bylaw.

Due to the tight timelines set by the Province, the design phase of Zoning Bylaw 6000 was not able to incorporate public consultation beyond the public hearing proposed for June 10, 2024. However, Phase 2 (Refine) and Phase 3 (Align) will incorporate public consultation through the OCP and TP update processes. By the end of 2025, as per provincial legislation, Zoning Bylaw 6000 will be aligned to implement the future vision of Vernon established through the development of the OCP and TP.

4. Phase 1: Design

Key changes in Zoning Bylaw 6000

- Consolidation of definitions and regulations.
- Removal of repetitive and unnecessary content.
- Reorganization of the document to provide a format that is user-friendly, easily interpreted, enforceable and effective to regulate land use in the City.
- Implementation of provincial housing legislation (Bill 44 and Bill 47).
- Implementation of provincial short-term rental legislation (Bill 35).

- Consolidation of zones to streamline development processes and elevate minor rezoning applications.
- Implementation of Council's direction to allow the Agricultural Land Commission, as well as applicable legislation and regulation to govern uses on land within the Agricultural Land Reserve.
- Adjustments to regulations to reduce the number of commonly supported variance requests.
- Allow for easy maintenance and updates in the future providing a foundation to build upon.

A section by section overview of the Phase 1 (Design) process is provided in Attachment 1.

5. Timeline to complete Phase 1

The following table outlines the steps required to implement Zoning Bylaw 6000 in accordance with the June 30, 2024 deadline for compliance with the housing legislation set by the Province.

Required Next Steps	**Date**
1st and 2nd Readings of Zoning Bylaw 6000	May 27
Setting Public Hearing date for June 10, 2024	May 27
Advertising of Public Hearing in two consecutive weeks of the Morning Star	May 30 June 6
Hold a Public Hearing	June 10
3rd Reading of Zoning Bylaw 6000	June 10
MoTI Signature Required on Zoning Bylaw 6000	June 11 – June 21
Adoption of Zoning Bylaw 6000	June 24
Provide written notice to the Minister of Housing confirming legislative requirements have been completed by the June, 30, 2024 deadline.	June 30

6. Implementation

Administration has prepared and launched a new section on the City's website explaining the process undertaken and the phased approach to the development of Zoning Bylaw 6000. Residents and the development community are encouraged to review the webpage for more information here.

Administration has also prepared a public version of the proposed new zoning map that will allow residents and the development community to search properties within the City to discover the proposed new zones for their property. Zoning Bylaw 6000 will also be placed on the zoning webpage to allow for public review of the proposed bylaw.

Internally, Administration is establishing a training program for staff to orientate them to the proposed new bylaw and zoning map.

C. Attachments:

1. Phase 1: Design – Process review
2. Proposed Zoning Bylaw 6000, 2024

D. Council's Strategic Plan Alignment:

☒ Governance & Organizational Excellence
☒ Recreation, Parks & Natural Areas
☒ Environmental Leadership
☒ Livability
☒ Vibrancy
☐ Not Applicable

E. Relevant Policy/Bylaws/Resolutions:

1. Zoning Bylaw 5000, 2004
2. At its regular meeting of January 22, 2024, Council passed the following resolution:
   i. THAT Council receive for information the report titled "Review of Legislative Changes & Implications: Bill 44 Housing Statues (Residential Development) & Bill 47 Housing Statues (Transit-Oriented Areas)" dated January 10, 2024 and respectfully submitted by the Current Planner;

   AND FURTHER, that Council direct Administration to prepare a new zoning bylaw to implement the regulatory changes required by the new legislation;

   AND FURTHER, that Council direct Administration to prepare a policy detailing how in-stream applications would be managed during the transition period.

BUDGET/RESOURCE IMPLICATIONS:

N/A

FINANCIAL IMPLICATIONS:

☒ None ☐ Budget Previously Approved ☐ New Budget Request (Finance Review Required)

Prepared by:

X Matt Faucher
Signer 1
Matt Faucher
Current Planner

X Terry Barton
Signer 2
Terry Barton
Director, Planning & Community Services

Approved for submission to Council:

Patricia Bridal, CAO

Date: May 21, 2024

REVIEWED WITH

- ☐ Corporate Services
  - ☐ Bylaw Compliance
  - ☐ Real Estate
- ☐ RCMP
- ☐ Fire & Rescue Services
- ☐ Human Resources
- ☐ Financial Services
- ☐ COMMITTEE:
- ☐ OTHER:
- ☐ Operations
  - ☐ Public Works/Airport
  - ☐ Facilities
  - ☐ Utilities
- ☐ Recreation Services
- ☐ Parks
- ☒ Current Planning
- ☒ Long Range Planning & Sustainability
- ☒ Building & Licensing
- ☒ Engineering Development Services
- ☐ Infrastructure Management
- ☒ Transportation
- ☒ Economic Development & Tourism

ATTACHMENT 1

The following table provides a section by section overview of the work completed in developing Zoning Bylaw 6000 through Phase 1: Design.

Section No.	Phase 1: Design Process
1 General Administration	• Full review and rewrite • Full legal review completed • New consolidated zones established • New Transit Oriented Development Areas established • Current application transition to Zoning Bylaw 6000 established

2 Interpretation	• Full review and rewrite
	• Full legal review completed
	• Definitions consolidated
	• Definitions organized into sections
	  • Residential Uses
	  • Commercial Uses
	  • Industrial Uses
	  • Community Uses
	  • Basic Services Uses
	  • Agricultural Uses
	  • General Definitions

3 Enforcement	• Full review and rewrite • Full legal review completed
4 Development Regulations	• Updates to this section are not required under the provincial housing legislation • Regulations no longer required have been removed • Regulations updated to comply with the new definitions and zones • Full review and potential rewrite required of Section 4 in Phase 2: Refine
5 Specific Use Regulations	• Updates to this section are not required under the provincial housing legislation • Regulations no longer required have been removed • Regulations updated to comply with the new definitions and zones • Home based business regulations consolidated to 1 use classification • Short-term Rental legislation implemented with minor regulations • Temporary Use Permits made available to all properties within the City • Full review and potential rewrite required of Section 5 in Phase 2: Refine
6 Landscape & Screening	• Updates to this section are not required under the provincial housing legislation • Regulations updated to comply with the new definitions and zones • Full review and rewrite required of Section 6 in Phase 2: Refine
7 Vehicle Parking, Loading and Bike Parking	• Full review and rewrite • Implementation of provincial housing legislation and transit orientated development areas • Re-evaluation of parking requirements across use classes • Increased focus on multi-modal transportation options

	• Full legal review completed

**8
Agricultural & Rural**
	• A1, A2, A3 and RR Zones consolidated into 3 zones
	  • ALR – Agricultural Land Reserve (ALR)
	  • AGRL – Agricultural & Rural: Large Block (Non-ALR)
	  • AGRS – Agricultural & Rural: Small Block (Non-ALR)
	• Implemented Council's direction to allow the ALC to govern uses on ALR lands
	• Full legal review completed

**9
Residential**
	• R1, R2, R3, R4, R5, R5A, R6, HR1, HR2, RST1 and RST2 consolidated into 2 zones
	  • MUS – Multi-Unit: Small Scale
	  • MUA – Multi-Unit Acreage: Small Scale
	• R7 transitioned to
	  • MHS – Mobile Home Site
	• RM1, RM2, RH1, RH2 and HR3 consolidated into 2 zones
	  • MUM – Multi-Unit: Medium Scale
	  • MSH – Medium Scale Housing
	• Full legal review completed

**10
Resort**
	• RTR transitioned to
	  • RTH – Resort Tourist Housing
	  • Change were required due to the provincial housing legislation
	• RTC, RTCA and C10A consolidated into 1 zone
	  • RCC – Resort Commercial Centre
	• Full legal review completed

**11
Commercial Mixed-Use**
	• C1, C2, C3 and C4 consolidated into 1 zone
	  • CMUN – Commercial Mixed-Use: Neighbourhood
	• C5, C6 and C10 consolidated into 1 zone
	  • CMUB – Commercial Mixed-Use: Business
	• C7, C8 and RH3 consolidated into 1 zone
	  • CMUC – Commercial Mixed-Use: Centre
	• C9 and C12 were removed as the zones were not applied to any properties
	• Full legal review completed

**12
Industrial**
	• C11, I1 and I4 consolidated into 1 zone
	  • INDL – Light Industrial
	• I2 transitioned to
	  • INDA – Airport Industrial
	• I3 and I5 were removed as the zones were not applied to any properties
	• Full legal review completed

**13
Community & Servicing**
	• P2 and P3 consolidated into 1 zone
	  • CMTY – Community
	• P4 transitioned to
	  • UTIL – Utilities
	• Full legal review completed

14 Parks	• P1 and P5 consolidated into 1 zone • PANS – Parks & Natural Spaces • Full legal review completed

15 Comprehensive Development	• CD1, CD2, CD3, CD4 and CD5 were all transitioned into comparable new City zones • CD6 remains due to its current legal status and will be reviewed in the future upon completion of the legal process
16 Overlays and Modifiers	• This section is a place holder for the future establishment of overlays and modifiers in Phase 2: Refine • Overlays act as site specific rezoning's to allow uses not applied in the new City zones such as, Minor Fuel Station, Drive-throughs and Heavy Industrial uses • Modifiers act as site specific modifications to specific properties in specific areas and will be informed by the Official Community Plan such as, adjustment of setbacks or heights along a transit corridor or in the downtown core
Schedule A Zoning Map	• The new zones have been applied to every property within the City • Neighbourhood by neighbourhood review of the map to identify and correct anomalies

Schedule B Transit Oriented Development Area Maps	• 2 Transit Oriented Development Areas have been established in accordance with the requirements of Bill 47
	  • Downtown Exchange (bus exchange)
	  • Village Green Centre Exchange (bus exchange)

NORD Zoning	• All properties within the City now have the new City zones applied. Any properties with NORD zoning under Zoning Bylaw 5000 have been transitioned to their comparable City zone.

ATTACHMENT 2

The Corporation of the City of Vernon
Bylaw Number 6000
Text Amendments

BYLAW NO.	ADOPTION	AMENDMENT

The Corporation of the City of Vernon
Bylaw Number 6000

REZONING AMENDMENTS TO THE ZONING MAP

ZONING BYLAW 6000

Consolidated for Convenience

TABLE OF CONTENTS

SECTION 1: General Administration 9

- 1.1 Title 9
- 1.2 Zoning Map 9
- 1.3 Transit Oriented Development Areas 10
- 1.4 Uses and Regulations 10
- 1.5 Compliance with other Regulation 11
- 1.6 Repeal 11
- 1.7 Applications in Process 11
- 1.8 Land Dedication and Setbacks 12
- 1.9 Undersized Lots 12
- 1.10 General Interpretation 12
- 1.11 Interpreting Conflicts 12
- 1.12 Rounding Numbers 13
- 1.13 Severability 13

SECTION 2: Interpretation 14

- 2.1 Rules of Interpretation 14
- 2.2 Zone Boundaries 14
- 2.3 General Definitions 15

SECTION 3: Enforcement 45

- 3.1 General 45
- 3.2 Right of Entry 45
- 3.3 Prohibitions 45
- 3.4 Penalties 46

SECTION 4: Development Regulations 47

- 4.2 Projections into Yards 47
- 4.3 Accessory Development 47
- 4.5 Services 50
- 4.6 Lighting 50
- 4.7 Setback from Provincial Highways 50
- 4.8 Rooftop Screening 51

4.9 Hillside Development Areas 51

SECTION 5: Specific Use Regulations 52

5.1 Application 52
5.2 Minimum Dwelling Unit Size 52
5.3 Home Based Businesses 52
5.4 Secondary Suites & Accessory Dwellings 53
5.5 Short-term Rental Accommodation 53
5.6 Bareland Strata Developments 54
5.7 Vehicular-oriented Uses 54
5.8 Car Washes 55
5.9 Temporary Use Permits 55
5.10 Temporary Shelter Services 55
5.11 Retail Cannabis Store 56

SECTION 6: Landscape & Screening 58

6.1 Required Landscaping 58
6.2 Landscaping Standards 58
6.3 Refuse and Recycling Bins 60
6.4 Public Amenity Areas 60
6.5 Fencing and Retaining Walls 61
6.6 Minimum Landscape Buffers 64

SECTION 7: Vehicle Parking, Loading, and Bike Parking 68

7.1 General Provisions 68
7.2 Development Standards 70
7.3 Vehicle Parking and Loading 72
7.4 Bike Parking 75

SECTION 8: Agricultural & Rural 79

8.1 ALR – Agricultural Land Reserve (ALR) 79
8.2 AGRL – Agriculture & Rural: Large Block (Non-ALR) 81
8.3 AGRS – Agriculture & Rural: Small Block (Non-ALR) 83

SECTION 9: Housing 86

9.1 MUS – Multi-Unit: Small Scale 86
9.2 MUA – Multi-Unit Acreage: Small Scale 91
9.3 MHS – Mobile Home Site 94
9.4 MUM – Multi-Unit: Medium Scale 97
9.5 MSH – Medium Scale Housing 100

SECTION 10: Resort 103

10.1 RTH – Resort Tourist Housing 103
10.2 RCC – Resort Commercial Centre 106

SECTION 11: Commercial Mixed-Use Zones 109

11.1 CMUN – Commercial Mixed Use: Neighbourhood 109
11.2 CMUB – Commercial Mixed Use: Business 112
11.3 CMUC – Commercial Mixed Use: Centre 115

SECTION 12: Industrial 118

12.1 INDL – Light Industrial 118
12.2 INDA – Airport Industrial 121

SECTION 13: Community & Servicing 123

13.1 CMTY – Community 123
13.2 UTIL – Utilities 126

SECTION 14: Parks 128

14.1 PANS – Parks & Natural Spaces 128

SECTION 15: Comprehensive Development 131

15.6 CD6 – Comprehensive Development Area 6 131

Section 16: Overlays and Modifiers 140

Schedule A – Zoning Map 141
Schedule B – Transit Oriented Development Area Maps 142

LIST OF DIAGRAMS

Diagram 2.1a —Finished Grade: Single Detached Housing 30
Diagram 2.1b — Finished Grade: Apartment 31
Diagram 2.1c —Finished Grade: Sloped Fronting Road 31
Diagram 2.2 — Front Lot Line: Panhandle Lot 32
Diagram 2.3 — Height Measurements 34
Diagram 2.4 — Walkout Basement 43
Diagram 6.1 — Retaining Wall on Higher Subject Property 63
Diagram 6.2 — Retaining Wall on Lower Subject Property 63
Diagram 6.3 — Minimum Landscape Buffer Treatment, Level 1 67
Diagram 6.4 — Minimum Landscape Buffer Treatment, Level 2 67
Diagram 6.5 — Minimum Landscape Buffer Treatment, Level 3 67
Diagram 6.6 — Minimum Landscape Buffer Treatment, Level 4 67

LIST OF TABLES

Table 7.1 — Minimum Drive Aisle Widths by Purpose 71
Table 7.2 — Required Minimum Number of Accessible Parking Spaces 72
Table 7.3 — Required Minimum Number of Visitor Parking Spaces 73
Table 7.4 — Minimum Ratio of Required EV-ready Vehicle Parking Spaces 73
Table 7.5 — Minimum Ratio of Required EV-ready Vehicle Parking Spaces 74
Table 7.6 — Additional parking space width required for obstruction 74
Table 7.7 — Parking, Loading, and Bike Parking Schedule 76

THE CORPORATION OF THE CITY OF VERNON
BYLAW NUMBER 6000

A BYLAW TO MANAGE THE USE OF LAND WITHIN THE CORPORATE BOUNDARIES OF THE CITY OF VERNON IN ACCORDANCE WITH PART 14 OF THE *LOCAL GOVERNMENT ACT*.

The Council of The Corporation of the City of Vernon, in open meeting assembled, enacts as follows:

READ A FIRST TIME this day of May, 2024

READ A SECOND TIME this day of May, 2024

PUBLIC HEARING held this day of June, 2024

READ A THIRD TIME this day of June, 2024

Approved pursuant to section 52(3)(a) of the *Transportation Act* this _____ day of _____, 20____	For the approval of rezoning bylaws and text amendments under the *Transportation Act*. (Senior District Development Technician, District Development Technician and Area Development & Operations Technician)

ADOPTED this day of June, 2024.

_____ _____

Mayor: Corporate Officer:

SECTION 1: General Administration

1.1 Title

This bylaw shall be referred to as the *City of Vernon Zoning Bylaw No. 6000 (2024)*.

1.2 Zoning Map

1.2.1 The City of Vernon is hereby divided into the following zones:

Agricultural & Rural

ALR Agricultural Land Reserve (ALR)
AGRL Agriculture & Rural: Large Block (Non-ALR)
AGRS Agriculture & Rural: Small Block (Non-ALR)

Housing

MUS Multi-Unit: Small Scale
MUA Multi-Unit Acreage: Small Scale
MHS Mobile Home Site
MUM Multi-Unit: Medium Scale
MSH Medium Scale Housing

Resort

RTH Resort Tourist Housing
RCC Resort Commercial Centre

Commercial

CMUN Commercial Mixed Use: Neighbourhood
CMUB Commercial Mixed Use: Business
CMUC Commercial Mixed Use: Centre

Industrial

INDL Light Industrial
INDA Airport Industrial

Community & Servicing

CMTY Community
UTIL Utilities

Parks

PANS Parks & Natural Space

Comprehensive Developments

CD6 Comprehensive Development Area 6

1.2.2 The boundaries of those zones including any sub-areas designated within zones are shown on the zoning map which is attached as Schedule 'A' to this bylaw.

1.2.3 In this bylaw, reference to zones by letters or letters and numbers shall be deemed to refer to the zone whose full title is set out in 1.2.1.

1.3 Transit Oriented Development Areas

1.3.1 The following areas are designated as **Transit Oriented Development Areas (TOD Areas)**:

.1 Downtown Exchange (bus exchange)
.2 Village Green Centre Exchange (bus exchange)

1.3.2 The boundaries of the **TOD Areas** are shown on the **TOD Area Maps** which are attached as Schedule 'B' to this bylaw.

1.4 Uses and Regulations

1.4.1 No land, **Building**, or **Structure**, within the City shall be developed, **Used**, constructed, erected, modified, converted, enlarged, re-constructed, altered, placed, maintained, or subdivided except in conformity with the provisions of this bylaw.

1.4.2 This bylaw does not apply in the following situations:

.1 alterations, maintenance and repair to any **Building** or **Structure**, provided that such work does not involve **Structural Alterations**; and does not change the **Use** or intensity of **Use** of the **Building** or **Structure**;

.2 the **Use** of a **Building**, or part thereof, as a temporary polling station, election official's headquarters, candidate's campaign office, and any other temporary **Use** in connection with a federal, provincial, or municipal election, referendum, or census;

.3 the **Use** of a **Building**, or part thereof, as a constituency **Office** for a federal Member of Parliament or a provincial Member of the Legislative Assembly when located in a commercial, industrial or community zone. Any signage for the constituency **Office** must meet the requirements of the *City of Vernon Sign Bylaw No. 4489* for the zoning of the **Lot**;

.4 a temporary **Structure** which is incidental to the erection, maintenance, alteration, or sales of a **Building**, **Structure**, or utility for which a building or development permit has been issued provided that they are removed within 30 days of project completion or one year following the issuance of a building permit, whichever is earliest;

.5 the **Use** of non-housing or non-agricultural zones for activities such as carnivals, religious gatherings, and music festivals for less than 7 days provided a valid license has been issued under the *City of Vernon Business License Bylaw No. 5480* or a special event permit issued by Council;

.6 railways, pipelines, irrigation ditches, conduits, flumes, and pump houses;

.7 utility services underground or within statutory rights-of-way and utility poles and anchors;

.8 lands within the boundaries of Indian Reserve 6;

.9 **Landscaping**, where the existing **Grade** and surface drainage pattern is not materially altered, except where required by Section 6; and

.10 **Construction**, maintenance and repair of private walkways, **Pathways** and **Driveways**.

1.5 Compliance with other Regulation

1.5.1 Regulations in the *City of Vernon Regional Airport Zoning Regulation Bylaw No. 4578 (2000)*, may also apply to the **Use** of land and construction of **Buildings** and **Structures** that are regulated by this bylaw, and in the event of any inconsistency the more restrictive provisions apply.

1.6 Repeal

1.6.1 The *City of Vernon Zoning Bylaw No. 5000 (2004)* is hereby repealed.

1.7 Applications in Process

1.7.1 A development will be processed in accordance with *City of Vernon Zoning Bylaw No. 5000*, as the bylaw read on the date of repeal, provided a development permit, development variance permit, or board of variance order was issued or a complete building permit application was submitted for the development prior to the date of repeal.

1.7.2 A building permit for any development processed in accordance with *City of Vernon Zoning Bylaw No. 5000* must be issued or rejected within 12 months of the effective date of this bylaw, and if rejected, any future development must comply with this bylaw.

1.7.3 Complete subdivision applications submitted and applicable subdivision fee paid prior to the effective date of this bylaw will be processed in accordance with *City of Vernon Zoning Bylaw No. 5000*, as the bylaw read on the date of repeal, for a period of 12 months after the effective date of this bylaw unless the applicant agrees in writing that this bylaw should have effect with respect to the subdivision. Such applications shall be approved or rejected within 12 months of this bylaw coming into effect and, if rejected, any future development must comply with this bylaw.

1.7.4 All other development must comply with this bylaw.

1.8 Land Dedication and Setbacks

1.8.1 Where a **Lot** is reduced in size as a result of a taking for public **Use** by the City, Provincial or Federal Government, an Improvement or Irrigation District, the Board of Education, or a Public Utility by dedication, expropriation, or purchase, the **Lot**, **Buildings** and **Structures** thereon are deemed to conform with the provisions of this bylaw. For the purpose of further developments, the **Lot** shall be considered to exist as it did prior to the taking but only if the taking is for road dedication, providing such taking:

.1 does not exceed 20% of the original **Lot Area**;

.2 in agricultural and rural zones, does not reduce the **Lot** to less than 0.2 ha (0.5 ac); or

.3 does not reduce a **Front**, **Flanking Side**, **Side**, or **Rear Setback** below 1.5 m unless this bylaw does not require such **Setback**.

1.9 Undersized Lots

1.9.1 Principal and/or **Accessory Use(s)** is(are) permitted on a **Lot** that is less than the minimum **Lot Area** in that zone, provided that the **Lot** was created before adoption of this bylaw and the development otherwise complies with all the regulations of this bylaw.

1.10 General Interpretation

1.10.1 When a word or phrase in this bylaw are capitalized, blue in colour and are written in bold font, it indicates a defined term in this bylaw. Words that are not capitalized, blue in colour and written in bold font should be given their plain and ordinary meaning as the context requires.

1.10.2 The Schedules attached to this bylaw form part of this bylaw.

1.11 Interpreting Conflicts

1.11.1 In the case of any conflict between the text of this bylaw and any maps, photos, diagrams, or drawings used to illustrate any aspect of this bylaw (including Section 1.2.2, Zoning Map), the text takes precedence.

1.11.2 In the case of any conflict between a number written in numerals and a number written in letters, the number written in numerals must govern.

1.11.3 In the case of any conflict between information expressed in metric units and in imperial units, the metric must govern.

1.12 Rounding Numbers

1.12.1 Unless specified elsewhere in this bylaw, units must be rounded to the tenth decimal place.

1.12.2 Where a calculation to determine any of the following results in a number with a tenth decimal place of 0.5 or greater, the value must be rounded up to the next whole number:

.1 total number of trees or shrubs required in compliance with Section 6; and

.2 minimum or maximum number of parking spaces, number of **Loading Spaces**, number of **Pick-up / Drop-Off** spaces, and number of **Bike Parking Spaces** required in compliance with Section 7.

1.12.3 Despite Section 1.12.2, where a calculation specified in Section 1.12.2 results in a number less than 1.0, the value must be rounded to 1.0.

1.13 Severability

1.13.1 If any section, paragraph or phrase of this bylaw is for any reason held to be invalid by a decision of a Court of competent jurisdiction, such decision will not affect the validity of the remaining portions of this bylaw.

SECTION 2: Interpretation

2.1 Rules of Interpretation

2.1.1 The phrase "used for" includes "arranged for", "designed for", "maintained for", or "occupied for".

2.1.2 Words, phrases, and terms neither defined in this section nor in the *Local Government Act, Community Charter* or the *Interpretation Act*, shall be given their usual and customary meaning for the purpose of interpreting this bylaw.

2.2 Zone Boundaries

2.2.1 The zone boundaries on the zoning map shall be interpreted as follows:

.1 where a zone boundary follows a **Street**, **Laneway**, **Alley**, railway, pipeline, power line, utility right-of-way, or easement, it follows the centerline, unless otherwise clearly indicated on the zoning map;

.2 where a zone boundary is shown as approximately following the City boundary, it follows the City boundary;

.3 where a zone boundary is shown as approximately following the edge, shoreline, or **Natural Boundary** of a river, lake, or other water body, it follows the **Natural Boundary**. In the event of change, it moves with the **Natural Boundary**;

.4 where a zone boundary is shown as approximately following a **Lot Line**, it follows the **Lot Line**;

.5 where a zone boundary is shown as approximately following a topographic contour line or a top-of-bank line, it follows that line;

.6 where a zone boundary is shown as being generally parallel to or as an extension of any of the features listed above, it shall be so interpreted accordingly; and

.7 in other circumstances, the location of the zone boundary shall be determined by the scale of the zoning map.

2.2.2 When any **Street**, **Laneway** or **Alley** is closed by bylaw enacted under the *Community Charter*, the land is deemed to have the same zoning as the abutting land. If the right-of-way is consolidated with an adjoining parcel, the parcel's zoning designation applies to the consolidated portion.

2.3 General Definitions

2.3.1 The definitions of **Uses** group individual land **Uses** into a specified number of classes, with common functional or physical impact characteristics. They define the range of **Uses** which are **Principal** and **Accessory**, with or without conditions, within various zones of this bylaw.

2.3.2 In interpreting the **Use** class definitions:

.1 Typical **Uses** listed in the definitions as examples are not intended to be exclusive or restrictive; and

.2 Where a specific **Use** generally conforms to the wording of two or more definitions, the **Use** conforms to and is included in that **Use** class which is most comparable in character, purpose and intensity.

2.3.3 The following words, terms, and phrases, wherever they occur in this bylaw, shall have the meaning assigned to them as follows:

Use Definitions

HOUSING USE

Large Scale Multi-Unit Housing means a **Building** that contains any number of **Dwelling Units** with a common entrance(s) or a combination of individual and common entrances.

Typical examples include: **Apartment Housing** and **Stacked Townhouses**.

Medium Scale Multi-Unit Housing means housing development consisting of five or more **Dwelling Units** or **Sleeping Units**.

Each **Dwelling Unit** will have an individual entrance, not necessarily at **Grade**.

This includes: **Townhouses** which may include **Secondary Suites** and **Stacked Townhouses**.

Mixed Use Housing means a **Building** that contains one or more **Dwelling Units** combined with at least one **Use** other than a housing **Use** or **Home Based Business**.

Mobile Home means a single or multiple section single detached **Dwelling Unit** (factory built to CSA Z240 standards) designed to be transportable.

This includes the **Uses** of **Mobile Home Site** and **Mobile Home Park**.

Security or Operator Dwelling Unit means an **Accessory Building** or portion of a **Building** used as a single **Dwelling Unit** to provide on-site accommodation for: persons employed on the property, a site caretaker, an operator of a commercial establishment, or an on-duty security personnel.

Small Scale Multi-Unit Housing means housing development consisting of three or more **Dwelling Units** or **Sleeping Units**.

Each **Dwelling Unit** must be **Ground Oriented** and have an individual entrance at **Grade**.

This includes: **Townhouses** which may include **Secondary Suites**.

Small Scale Housing means housing development consisting of up to two **Dwelling Units** or **Sleeping Units**. **Dwelling Units** may include **Secondary Suites** and/or **Accessory Dwelling Units**.

This includes: **Duplex Housing**, **Semi-detached Housing**, and **Detached Housing**, or any combination thereof.

COMMERCIAL USE

Accessory Parking means the use of premises for **Vehicle** parking in connection with the **Principal Use** of the same premises. This **Use** includes parking for fleet **Vehicles** with a gross vehicle weight of not more than 5,500 kg.

Typical examples include: **Surface Parking Lots** and **Parkades** on a **Site** with any **Principal Use**. This **Use** does not include **Standalone Parking Facilities**.

Animal Services means boarding, breeding, buying, selling or training of domesticated animals.

Typical examples include: animal shelters, kennels, and stables or a riding academy.

Auction Sales means premises used for the sale of goods and equipment at auction including the **Temporary Storage** of such goods and equipment.

Bar means premises used primarily for the sale of alcoholic beverages for on-site consumption. Food and non-alcoholic drinks may also be offered at these premises. Less than 10% of the total **Floor Area** is used for entertainment areas for dancing, performance stages and other ancillary activities.

Typical examples include: taverns, pubs, brew pubs, micro distilleries with sampling rooms, and cocktail lounges.

Cannabis Retail Store means a development where a business sells **Cannabis** to be consumed off-site as permitted by Provincial or Federal legislation. This **Use** includes retail sales of other related products.

This **Use** does not include **Cannabis Cultivation and Processing**.

Cannabis Lounge means a development where a business sells **Cannabis** to be consumed on-site by the public in a location permitted by Provincial or Federal legislation. This **Use** includes retail sales of other related products.

This **Use** does not include **Cannabis Cultivation and Processing**.

Campsite means the use of land for the seasonal short term accommodation of holiday trailers, motor homes, tents, campers and similar **Recreational Vehicles** for a period not to exceed 180 days by any one visitor in one year.

Typical examples include: tourist trailer parks, **Recreational Vehicle** sites, and tenting grounds.

Commercial Storage means use of land for open air storage of equipment, goods, or materials ancillary to the operation of a business on the same premises, where such storage of goods and materials does not involve the erection of permanent **Structures** or the material alteration of the land. This may include the use of **Shipping Containers** to accommodate the equipment, goods or materials.

Typical examples include: storage of tires, automotive parts, waste or recyclable materials, or goods related to the operation of the business.

Drive-through Services means the provision of services, food or other goods to customers seated in their **Vehicles** via one or more designated drive-through lanes or car attendant services, but does not include **Drive-through Vehicle Services**.

Food and Beverage Service means the sale of prepared food and drinks to the public for consumption on or off-site which may include the sale of alcoholic beverages. This **Use** does not include **Grocery Stores**.

Typical examples include: cafes, coffee shops, juice bars, and restaurants.

Grocery Store means indoor premises used for the retail sale of a range of fresh or packaged food products. Other household items may also be sold.

Health Service means the provision of physical or mental health services on an out-patient basis. Services may be of a preventive, diagnostic, treatment, therapeutic, rehabilitative, or counseling nature.

Typical activities include: medical and dental offices, health clinics, medical laboratories, massage therapists and acupuncture clinics and counseling services.

Home Based Business means a business operated primarily inside a **Dwelling Unit** or an **Accessory Building** in a housing zone by a resident of that **Dwelling Unit**. A housing **Use** is the primary development on the site and the business activity is **Accessory**. This **Use** includes **Home Based Child Care**.

This **Use** does not include **Food and Beverage Service**, **Vehicle Support Services** or **Light Industrial Uses** of any kind.

Housing Sales Centre means the use of **Buildings** or **Structures** for a limited period of time for marketing housing land or **Buildings** on the same or an **Adjacent Site**.

Hotel means a **Building** providing temporary overnight accommodation in guest rooms or suites. Hotels may provide concierge service, cleaning service, meeting rooms, dining services, and other guest services or amenities.

Typical examples include: apartment hotels, hostels, inns, and motels.

Indoor Sales and Service means the provision of goods or services within a **Building** such as the retail sales of goods, repair services, personal services, or commercial instruction.

Typical examples include: art studios, convenience stores, commercial schools, electronics repair services, hair salons, household item repair services, indoor markets, pawnshops, pet care and grooming, pharmacies, second-hand stores, tailor shops, thrift shops, and tattoo parlours.

Light Manufacturing means the manufacture or crafting of products that may be sold to consumers or commercial businesses. Products may be consumed on-site where associated with food and beverage production activities. This **Use** does not include **Cannabis Cultivation and Processing**.

Typical examples include: commercial kitchens, makerspaces, microbreweries, small-scale electronic manufacturing or assembly, small-scale manufacturing, as well as wineries and distilleries.

Liquor Store means premises used for the retail sale of packaged liquor for consumption off the premises.

Marina means docking or mooring facilities where boats and other vessels and their accessories are berthed, fueled, stored, serviced, repaired, constructed or kept for sale or for rent.

Major Indoor Entertainment means the use of indoor facilities for entertainment, recreation, conferences, or similar public assembly purposes or for the collection, preservation or exhibition of works or objects of historical, scientific, or artistic value.

Supporting activities may include merchandise, food, or beverage sales, including alcoholic beverages.

Typical examples include: auditoriums, aquariums, arenas, casinos, concert halls, convention centres, amusement centres, botanical gardens, museums, planetariums, stadiums, theatres, and sports or entertainment complexes.

Minor Fuel Station means premises used for the sale of motor fuel, lubricating oils, automotive fluids and associated convenience store products. The facility may be a self-service, full service, key lock, card lock, or other similar operation and may include **Vehicle** washing facilities as an **Accessory Use**. This does not include **Vehicle Support Services**, **Drive-through Vehicle Services** or **Minor Industrial Uses**.

Typical examples include: fueling stations with convenience retail stores or a car wash as an **Accessory Use**.

Minor Indoor Entertainment means the use of indoor facilities for entertainment or active recreation serving a local population.

Typical examples include: arcades, bingo halls, bowling alleys, climbing facilities, fitness facilities, gyms, gymnastic facilities, indoor playgrounds, trampoline centres.

Office means premises used for the provision of professional, management, administrative, consulting, or financial services.

Typical examples include: offices for accountants, administrative services, architects, corporations, financial institutions, employment or call centres, real estate, law, and insurance firms.

Outdoor Entertainment means the use of land for outdoor entertainment purposes that typically require large spaces. Supporting activities may include merchandise, food, or beverage sales.

Typical examples include: amphitheatres, drive-in movie theatres, go-kart tracks, mini-golf courses, amusement parks, water parks, botanical gardens, racing tracks, and zoos.

Outdoor Sales and Service means premises used for sales and service activities taking place primarily outdoors. This may include **Vehicle Storage** or display.

Typical examples include: sales, service and rentals of automotive and **Recreation Vehicles** (with a gross vehicle weight rating (GVWR) of less than 5,500 kg), light construction equipment, recreational watercraft, and plant nurseries and garden centres.

Outdoor Vending means the use of an independently operated **Vehicle**, **Structure**, or mobile apparatus occupying public or private space for retail sale of products, food or beverages, to passers-by.

Typical examples include: food and beverage trucks, and retail sales or services conducted in a temporary **Structure** such as a tent or booth.

Resort Accommodation means accommodations provided to members of the public at a property, in exchange for remuneration, in a resort area.

Typical examples include: strata-titled hotels and motels in resort areas.

Shopping Centre means one or more **Buildings** containing more than six retail stores and other businesses exceeding 2500 m^2 of **Gross Floor Area** in total, which share common services, parking, and other facilities on one or more **Lots**.

Typical examples include: shopping malls and indoor or outdoor shopping complexes.

Short-term Rental Accommodation means the commercial provision of overnight accommodation in a **Dwelling Unit**, to members of the public for a period of less than 90 consecutive days or such other period of time as may be prescribed under the *Short-Term Rental Accommodations Act*.

Typical examples include: bed and breakfasts, Short-Term Rentals (STRs), or tourist accommodation **Uses** permitted by this bylaw in housing or resort areas.

Standalone Parking Facility means is the use of land or a parking structure for **Vehicle** parking as a **Principal Use**.

Typical examples include: **Parkades** and **Surface Parking Lots**.

Temporary Storage means the use of land for the outdoor storage of equipment, goods, or materials for a period of 180 days or less in a calendar year, where such storage does not involve the erection of permanent **Structures** or the material alteration of the land. This may include the use of **Shipping Containers** to accommodate the equipment, goods or materials.

Typical examples include: storage of construction materials in connection with an unexpired building permit, and overnight storage of seasonal goods related to a temporary garden supply **Use**, holiday tree sale or outdoor activities.

Vehicle Storage means the use of land or **Buildings** for the storage of cars, trucks, **Recreational Vehicles**, campers, or similar **Vehicles**, as well as boats and other marine equipment. This **Use** does not include the servicing, sales or repair of **Vehicles**, on-site fuel dispensing or the storage of **Vehicles** that are not in operating condition.

Vehicle Support Service means the use of land for the repair, maintenance, or fueling of automobiles and other **Vehicles** with a gross vehicle weight rating (GVWR) of less than 5,500 kg.

Typical examples include: vehicle repair shops, such as transmission, muffler, tire, automotive glass, and upholstery shops. This **Use** does not include **Minor Industrial Uses**.

INDUSTRIAL USE

Aerospace Research and Development means the use of land for the research, design, manufacturing and distribution of products used in the fields of aeronautics, such as airplanes and related technology.

Aircraft Services means the use of land for the storage, retail sale or rental of aircraft together with repairs and maintenance services, as well as the manufacturing and sales of aircraft parts and accessories.

Airport Terminal and Navigation Facilities means facilities providing services to passengers embarking and disembarking from aircraft, providing for the loading and unloading of luggage or cargo and providing for the navigation of aircraft on the ground and in the air. The **Uses** may include, **Indoor Sales and Services**, **Food and Beverage Services**, and **Bars**.

Crematorium means the use of a **Building** for cremation of human or pet remains and includes everything incidental or ancillary to it.

Drive-through Vehicle Services means the provision of rapid cleaning, lubrication, and maintenance or repair services to **Vehicles**, where the customer typically remains within the **Vehicle** or waits on-site.

Typical examples include: automatic or coin operated car washes, rapid lubrication shops, or specialty repair shops.

Heavy Industrial means premises used primarily for one or more of the following activities:

i. asphalt plants;
ii. chemical plants;
iii. concrete plants;
iv. contaminated soil treatment facilities; or
v. recycling plants.

Indoor Self Storage means the storage of personal items and goods in **Buildings** with separate compartments, each having its own access which may be external or from a common space such as a corridor.

Light Industrial means premises used primarily for one or more of the following activities:

i. auto body repair and paint shops;
ii. automotive and equipment repair shops;
iii. **Cannabis Cultivation and Processing**;
iv. contractor and construction services;
v. equipment or **Vehicle** repair and storage facilities;
vi. laboratories;
vii. **Landscaping** supply facilities;
viii. materials storage yards;
ix. research facilities;
x. taxi or limousine services;
xi. truck storage yards;
xii. **Vehicle** and equipment sales and rentals;
xiii. aircraft sales and rentals;
xiv. **Mobile Home** sales and storage yards; and
xv. warehouses.

Major Alcohol Production means production of alcoholic beverages or alcohol products in quantities greater than 10,000 hectoliters (219,969 imperial gallons) per year, with alcoholic content exceeding 1% by volume. This **Use** excludes small-scale alcohol production (see **Light Manufacturing**).

Major Fueling Station means premises used for the bulk storage and distribution of petroleum products including key lock or card lock retail sales.

Natural Resource Development means the removal, extraction, and primary processing of natural resources. This **Use** does not include the processing of raw materials transported to the **Site**.

Typical examples include: clay pits, coal mining, gravel pits, oil and gas wells, sandpits, and stripping of topsoil.

Shipping Container Storage means the storage of **Shipping Containers** where the contents are not accessible by the public or customers of the business storing the **Shipping Containers**.

Shipping Container Storage Facility means the storage of **Shipping Containers** where the contents are accessible by the owners of the contents.

Wrecking Yard means the use of premises for the collection, demolition, dismantling, storage, salvage, recycling or sale of waste materials including scrap metal, **Vehicles**, machinery, and other discarded materials.

COMMUNITY USE

Child Care Service means premises used to provide temporary housing-based care and supervision of children, licensed under the *Community Care and Assisted Living Act* and subject to the *Child Care Licensing Regulation*. This **Use** includes facility-based early learning and child care programs. This **Use** does not include a **Home Based Business** operating as **Home Based Child Care**.

Typical examples include: daycares, out-of-school care, and preschools.

Community Service means premises used for public institutional, cultural, recreational, religious, spiritual, social, arts, or educational activities. This **Use** does not include **Child Care Services**, **Libraries**, or **Schools**.

Typical examples include: community halls, community league buildings, community recreation centres, **Religious Assemblies**, **Seasonal Shelters**, **Temporary Shelter Services**, and **Year-round Shelters**.

Government Services means premises used to provide municipal, provincial or federal government services directly to the public. This does not include protective and **Emergency Services**, **Detention Facilities**, **Major or Minor Utility Services**, or public education services.

Typical examples include: city hall, taxation **Offices**, courthouses, employment **Offices**, and social service **Offices**.

Housing Care Centre means premises used to provide housing-based care to children, youth, or adults, licensed under the *Community Care and Assisted Living Act* and subject to the *Residential Care Regulation*.

Typical examples include: long-term care, community living, hospice, mental health and substance use treatment facilities, acquired injury and adult, child or youth housing-based **Uses**.

Library means premises holding a collection of books, art, music, video, computer programs, or other reference and creative materials available for people to use or borrow.

Outdoor Recreation Facility means the use of land for outdoor recreation purposes.

Typical examples include: golf courses and sports fields that may require paid entry or have restricted access.

Park means the use of public or private land for active or passive recreation. These may include facilities, playing fields, **Buildings** and other **Structures** that serve a recreational purpose of the park.

Typical examples include: open green space, environmentally sensitive areas, wildlife sanctuaries, green belts, conservation areas, buffer areas, natural interpretation areas, **Landscaping**, trails and paths, walkways, picnic grounds, plazas, sports fields, tennis courts, and associated **Structures** such as band shells, ice rinks, outdoor pools, tot-lots, playgrounds, and spray parks.

School means premises used to provide education, training or instruction to children or adults. It may include **Offices**, **Food and Drink Services**, **Indoor Sales and Services**, or other related facilities. This **Use** does not include private commercial facilities used for training and instruction in a specific trade, skill, service or artistic endeavour.

Typical examples include: charter **Schools**, community colleges, public and private elementary and secondary **Schools**, universities, technical **Schools** and their administrative **Offices**.

Special Event means the use of land for temporary activities in an indoor or outdoor space.

Typical examples include: carnivals, circuses, festivals, markets, and pop-up events.

Supportive Housing means the use of a **Building**, or part of a **Building**, containing one or more **Sleeping Units** or **Dwelling Units** to provide accommodations and on-site social, physical, or mental health supports to ensure an individual's daily needs are met.

BASIC SERVICES USE

Cemetery means the use of land for interment of human remains, and may include columbaria, mausoleums, and **Buildings** used for funeral services.

Detention Facility means the use of land and **Buildings** for the detention and imprisonment of persons serving custodial sentences.

Typical examples include: corrections facilities, jails, prisons, and remand centres.

Emergency Services means the use of land for the provision of protective services to the public. It may include incidental training facilities, as well as equipment and **Vehicle** storage.

Typical examples include: ambulance services, fire stations, police stations, emergency operations centres, and associated training facilities.

Essential Utility means infrastructure which forms a necessary part of a public or private utility.

Typical examples include: electrical power transformers, water and sewage pumping stations, regulating stations, stormwater management facilities, and above ground or underground water reservoirs.

Health Care Facility means premises used for the provision of health care services, medical treatment, and accommodations for people requiring care, and may include out-patient services and staff residences.

Typical examples include auxiliary hospitals, continuing care facilities, convalescent homes, detoxification centres, and hospitals.

Major Utility Services means premises used primarily for utility infrastructure including one or more of the following activities:

i. sanitary land fill sites;
ii. sewage treatment plants;
iii. water treatment plants;
iv. major pump houses;
v. water towers or tanks;
vi. sewage lagoons;
vii. snow dumping sites;
viii. sludge disposal beds;
ix. garbage transfer and compacting stations;
x. power terminal and distributing stations;
xi. power generating stations;
xii. cooling plants;
xiii. equipment and material storage yards for **Vehicles**;
xiv. utilities and services;
xv. district heating plants;
xvi. incinerators; and
xvii. waste recycling plants.

Minor Utility Services means premises used primarily for utility infrastructure including one or more of the following activities:

i. telephone exchanges;
ii. wire centres;
iii. switching centres;
iv. surface reservoirs or storm water lakes including **Adjacent Landscaping** and walkways;
v. minor pump houses;
vi. communication towers;
vii. gate stations for natural gas distribution; and
viii. transit terminals.

Recycling Drop-off Centre means premises used for the buying, collection, drop off, sorting, and **Temporary Storage** and pick up location for recyclable materials. Recyclable materials include, but are not limited to cardboard, plastics, paper, metal, bottles and similar household goods or return for deposit items.

Transit Facility means the use of land for the provision of publicly or privately-operated transit services. This **Use** does not include **Vehicle Storage** and maintenance facilities.

Typical examples include: bus stops, bus exchanges, regional bus stations, transit centres, and transit plazas.

AGRICULTURAL USE

Additional Agricultural Dwelling means a **Dwelling Unit** on a farm used to house permanent or seasonal farm workers employed on the premises.

Agriculture means the use of land for raising animals and production of dairy products, or growing crops, including grains, vegetables and fruits and other plants for economic gain such as food, **Landscaping**, fibre, or fuel and includes ancillary related **Uses**. This may include the sale of agricultural products raised or grown on-site and related **Accessory** products.

Typical examples include: farms, greenhouses and orchards.

Agricultural Stand means an **Accessory Building** or **Structure** used for retail sales of agricultural products on a farm.

Agri-tourist Accommodation means the use described in section 33 of the *Agricultural Land Commission Act*.

Typical examples include: guest ranches, farm inns, bed and breakfast homes, tourist campsites, and **Recreational Vehicle** pads.

Urban Agriculture means the growing of fruits, vegetables, plants, or raising chickens or bees in urban areas for sale rather than personal consumption. This **Use** does not include **Cannabis Cultivation and Processing**.

Typical examples include: community gardens, food gardens, hen enclosures, hydroponic or aquaponic systems, and vertical farms.

General Definitions

A

Accessory means a **Use**, **Building** or **Structure** that is customarily incidental, subordinate, and devoted to the **Principal Use** or **Building**, and located on the same **Lot**.

Accessory Dwelling Unit (ADU) means an **Accessory Building** used in whole or part as a **Dwelling Unit**, that is **Accessory** to a principal **Dwelling Unit** located on the same **Lot**. A **Dwelling Unit** connected to the principal **Dwelling Unit** by covered outdoor passage or breezeway is considered an **Accessory Dwelling Unit**.

Adjacent means land that abuts and is contiguous to a **Site**, and also includes land that would be contiguous if not for a **Street**, **Laneway**, **Alley**, walkway, stream, utility **Lot**, underground pipeline, power line, drainage ditch, **Watercourse**, or similar feature.

Agri-Tourism means an activity described in section 12 of the *Agricultural Land Commission Act*. This land **Use** excludes **Agri-Tourist Accommodations**.

Alley means an unimproved narrow roadway primarily intended to give access to the rear of **Buildings** and parcels of land.

Alternative Fuel Infrastructure means any one of the following:

i. Direct Current Fast Charger (DCFC; Level 3 EV Charger), Level 2 Charger, or its equivalent; or
ii. Hydrogen **Vehicle** refueling station.

Amenity Area means:

i. with respect to housing **Uses**, space outside a **Dwelling** or **Sleeping Unit** provided for the active or passive recreation and enjoyment of the occupants of a housing development, which may be for private or communal use and owned individually or in common, subject to the regulations of this bylaw;
ii. with respect to non-housing **Uses**, space provided for the active or passive recreation and enjoyment of the public, during the hours the development is open to the public, that is owned and maintained by the **Owners** of the development or the business operating on-site, subject to the regulations of this bylaw; and
iii. with respect to both housing and non-housing **Uses**, may include indoor or outdoor spaces, **Platform Structures**, **Rooftop Terraces**, and **Accessory Structures**.

Typical examples include a **Common Amenity Area**, a **Private Amenity Area**, or a **Public Amenity Area**.

Apartment Housing means a multi-unit housing **Use** of at least three attached **Dwelling Units**, which does not conform to the definition of any other housing **Use** class. The **Dwelling Units** within **Apartment Housing** may include any configuration of number of bedrooms.

The **Apartment Housing Use** includes any **Building** configured for **Supportive Housing**.

Architectural Elements mean **Building** details used to accentuate entrances, windows, storefronts or other prominent **Building** features to create visual interest. Architectural Elements include details such as varying rooflines, mouldings, arches, lintels, columns, cornices, and sills.

Awning means a covering of non-rigid materials such as canvas or similar fabric projecting from the exterior wall of a **Building**.

B

Balcony means an unenclosed platform, attached to and projecting from the face of a **Building**, above the first **Storey**, which is only accessed from within the **Building**.

Barrier-free means an absence of obstacles, allowing people with physical, cognitive or sensory impairments safer or easier access to **Pathways**, open spaces, amenities, facilities, services, activities, or areas within a **Building**.

Typical examples of obstacles include doorways that project into a **Barrier-free** path and a lack of access between **Building** floors.

Basement means any portion of a **Building** or **Structure** that is wholly or partially below ground level, the ceiling of which measured to the top of the floor system above is 1.83 m or less from **Grade**.

Bike Parking Space means a space designed for parking a bike in an orderly and secure manner. A **Bike Parking Space** can be designed to secure a bike horizontally (including stacked) or vertically and can also be designed as **Inclusive Bike Parking**.

A **Bike Parking Space** can be provided as **Short-term Bike Parking** or **Long-term Bike Parking**.

Building means a **Structure** having a roof supported by columns or walls used or intended to be used for the shelter or enclosure of persons, animals, materials, chattels or equipment.

Building Envelope that portion of a **Lot** that is not a **Setback** area or subject to a restrictive covenant that prohibits the construction of **Buildings** or the disturbance of the land.

Building Frontage means the length of a **Building** wall that faces a **Street**.

C

Caliper means the trunk diameter of a tree measured at a point 300 mm above the top of the root ball.

Cannabis has the meaning prescribed in the *Cannabis Control and Licensing Act*.

Cannabis Cultivation and Processing means the use of premises for one or more of the following activities:

i. producing, cultivating, or growing **Cannabis**;
ii. processing raw **Cannabis** materials; or
iii. making, testing, manufacturing, assembling or in any way altering the chemical or physical properties of semi-finished or finished goods and products made from **Cannabis**.

Canopy means a non-retractable hood cover or marquee which projects from the wall of a **Building**. It does not include an **Awning**, projecting roof, roof eaves, or an enclosed **Structure**.

Cluster Housing means two or more **Principal Dwelling Units**, other than **Accessory Dwelling Units**, on a **Site** that includes common property, such as communal **Parking Areas**, private roadways, **Pathways**, **Amenity Areas**, or maintenance areas that are shared.

Commercial Frontage means non-housing **Uses** located at ground level and oriented towards an abutting **Street**.

Commercial Vehicle means a **Vehicle** that is intended or designed for commercial purposes or is used for commercial purposes exceeding 5,500 kg licensed Gross Vehicle Weight (GVW).

Typical examples include long box trucks, oversized transit vans, specialized single-unit trucks, front- and side-loading collection trucks, buses, and semi-truck and trailers.

Common Amenity Area means an **Amenity Area** that provides communal space for the active or passive recreation and enjoyment of all occupants of a housing development and must not be located within the required **Setback** areas.

Community Sewer System means a sanitary sewer or a system of sewage disposal works that is owned, operated and maintained by the City.

Community Water System means a system of waterworks, which is owned, operated and maintained by the City, Greater Vernon Water, or an Improvement District under the *Water Utility Act*.

Corner Lot means a **Lot** that is:

i. located at the intersection of two **Streets**, if the angle of the intersection is less than 135 degrees; or
ii. Abutting a **Street** that is curved less than 135 degrees where it abuts the **Lot**.

Corner Site means a **Site** where at least one **Lot** is a **Corner Lot**.

D

Dangerous Goods means products, materials or substances that are:

i. regulated by the Transportation of Dangerous Goods Regulations SOR/2001-286; or
ii. classified as controlled products under the Hazardous Products Regulations SOR/2015-17.

Deck means a **Structure** more than 0.6 m above **Grade** without a roof or walls, except for visual partitions and railings, used as an **Amenity Area**.

Density means:

i. when used in reference to housing development, the number of **Dwellings Units** on a **Site**, expressed as **Dwelling Units** per hectare or **Floor Area Ratio**, as the case may be; or
ii. when used in reference to non-housing development, **Floor Area Ratio**.

For clarity, a **Secondary Suite** and an **Accessory Dwelling Unit** are **Dwelling Units** for the purposes of calculating the **Density** of a **Site**.

For the purposes of calculating **Density** for developments containing **Sleeping Units**, each **Sleeping Unit** is considered a **Dwelling Unit**.

Detached Housing means a **Building** that contains one **Principal Dwelling Unit** with direct access to ground level.

Director of Planning & Community Services means the person appointed to that position by the City and includes a person acting for the Director or appointed to act in that office and the deputy of the Director.

Double Fronting Lot means a **Lot** other than a **Corner Lot**, that abuts two **Streets**.

Drive Aisle means the area that provides on-site circulation for **Vehicles** within **Parkades** or **Surface Parking Lots**, and does not include a **Street**, **Laneway**, **Alley**, **Pathway**, or **Vehicle** access.

Driveway means an area that provides **Vehicle** access to the **Garage** or **Parking Area** of a **Small Scale Housing** development from a **Street**, **Laneway**, **Alley**, or private roadway. A **Driveway** may be used for **Vehicle** parking spaces and does not include a **Pathway**.

Dwelling Unit means one or more rooms within a **Building** used for housing purposes including a bathroom, living room, and kitchen and one or more bedrooms unless the unit is a **Studio Apartment**. A **Dwelling Unit** includes a **Private Amenity Area** for the use of residents of the **Dwelling Unit**.

For clarity, a **Secondary Suite** and an **Accessory Dwelling Unit** are **Dwelling Units** for the purposes of calculating the **Density** of a **Site** and a **Mobile Home** is a permitted **Dwelling Unit** type in a zone that permits **Mobile Home Parks**.

E

Exterior Lot means a **Lot** bordered by another **Lot** on one **Side Lot Line** and by a **Flanking Street** on the other **Side Lot Line**.

F

Finished Grade means the elevation of the finished surface of the ground at the base of the outside walls of a **Building** or **Structure**. **Finished Grade** is determined by taking the level of the finished ground surface at every location of **Grade** change along the outside walls of a **Building** or **Structure**. **Finished Grade** must be at least 1.5 m wide measured from the base of the wall or the width of the **Setback** in that location (whichever is less). The **Finished Grade** can increase or decrease at a maximum rate of 15% from the base of the wall to the width of the **Setback** at that location or at least 1.5 m wide (whichever is less). Window wells and access stairwells are exempted for determination of **Finished Grade**.

Finished Grades shall follow specific grading regulations outlined in Section 4.4 Height and Grade.

Diagram 2.1a —Finished Grade: Single Detached Housing

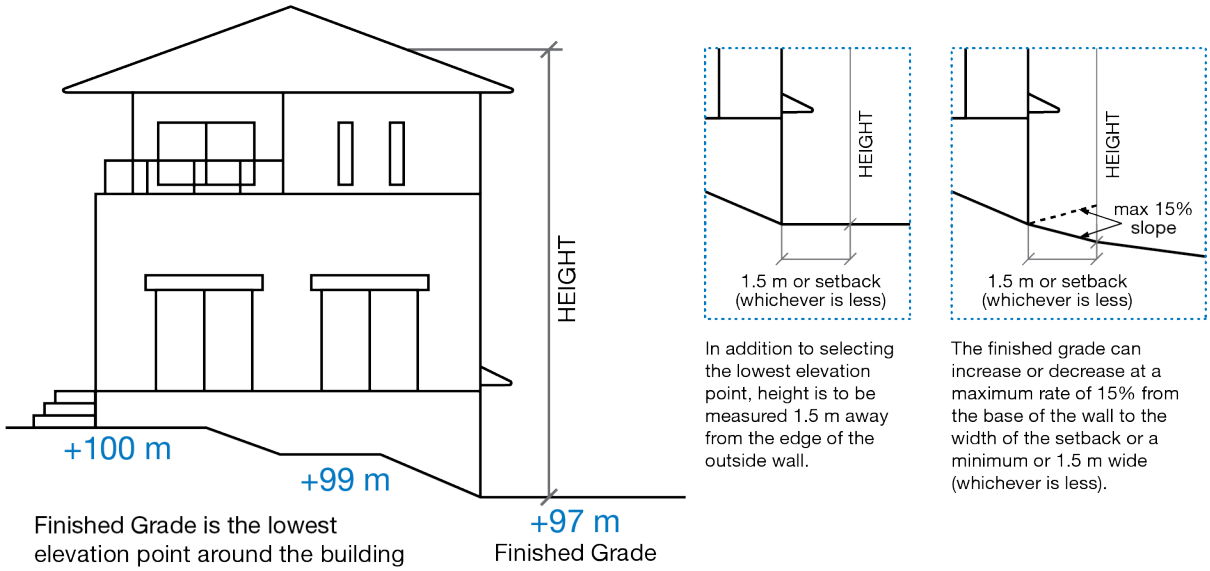

Diagram 2.1b — Finished Grade: Apartment

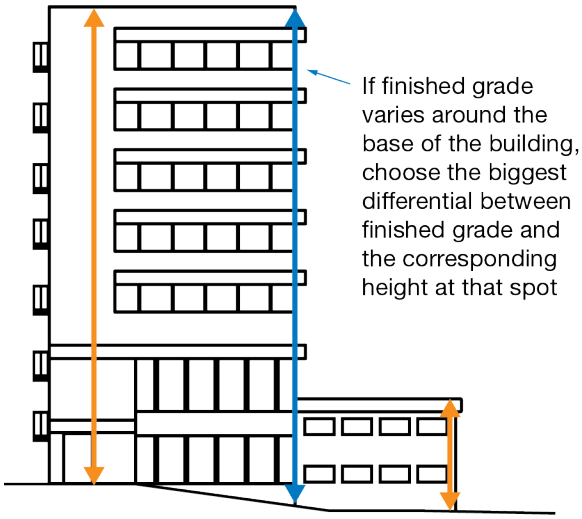

Diagram 2.1c —Finished Grade: Sloped Fronting Road

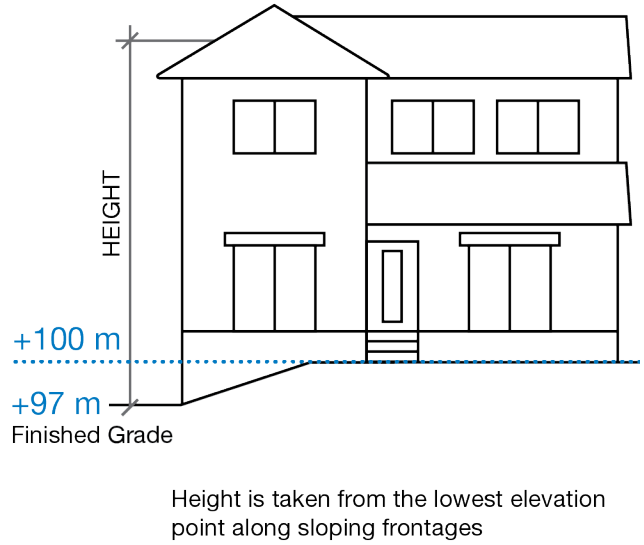

Flanking Side Lot Line means a **Lot Line**, other than a **Front Lot Line**, that abuts a **Street** on a **Corner Site**.

Flanking Side Setback means the minimum distance specified in this bylaw between a **Building** or **Structure** and a **Flanking Side Lot Line**. A **Flanking Side Setback** is not a **Flanking Side Yard**.

Flanking Side Yard means the portion of a **Site** abutting the **Flanking Side Lot Line**, extending between the **Front Yard** and the **Rear Yard** and located between the **Flanking Side Lot Line** and the nearest wall of the **Principal Building**, not including projections.

Flanking Street means a **Street** abutting a **Flanking Side Lot Line**.

Floor Area means the area of a **Building** or **Structure**, contained within the outside surface of the exterior walls. Where a wall contains windows, the glazing line of windows may be used.

Floor Area Ratio (FAR) means the numerical value of the **Net Floor Area** on all levels of all **Buildings** and **Structures** on a **Lot**, divided by the **Lot Area**.

Floor Plate means the **Floor Area** of a **Storey** of a **Building**.

Frequent Transit Route means a bus route that provides frequent transit services meeting the frequency and span levels established by the Province, typically with service every 15-minutes or less during operational periods.

Front Lot Line means:

i. the **Lot Line** separating a **Lot** from an abutting **Street**;
ii. in the case of a **Corner Lot**, the shorter of the **Lot Lines** abutting a **Street**;
iii. in the case of a **Corner Lot** formed by a curved **Street**, the shorter of the two **Lot Line** segments between the point determined to be the actual corner, and the two points at the endpoints of that **Lot Line**;
iv. in the case of a **Double Fronting Lot**, both **Lot Lines** separating the **Lot** from an abutting **Street**; or
v. in the case of a **Panhandle Lot**, the **Front Lot Line** is the **Lot Line** indicated in the following figure.

Diagram 2.2 — Front Lot Line: Panhandle Lot

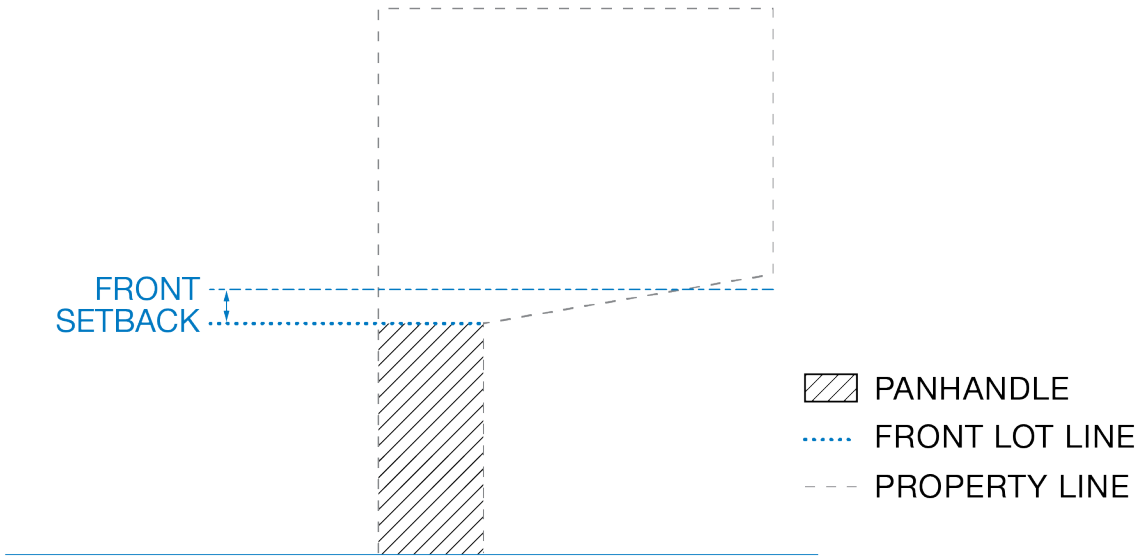

Front Setback means the minimum distance specified in this bylaw between a **Building** or **Structure** and a **Front Lot Line**. A **Front Setback** is not a **Front Yard**.

Frontage means:

i. where used with reference to **Buildings**, the total linear distance measured along the length of all facades facing a **Street**; or
ii. where used with reference to **Sites** or **Lots**, the total linear distance measured along the length of all **Lot Lines** that abut a **Street**.

Front Yard means the portion of a **Site** abutting the **Front Lot Line** extending across the full **Lot Width**, between the **Front Lot Line** and the nearest wall of the **Principal Building**, not including projections.

G

Garage means an **Accessory Building**, or part of a **Principal Building**, designed and used primarily to store **Vehicles** and includes **Carports**. A **Garage** does not contain a **Drive Aisle**.

Garage / Yard Sale means the sales of used household goods on a housing-based **Lot** by the **Owner** or occupier of the property.

Grade means a geodetic elevation from which the **Height** of a **Building** or **Structure** is measured.

For the purpose of a **Parking Area**, means the percent slope of a **Driveway** or **Drive Aisle** that is sloped for access over an area with a change in elevation or between floors in a **Parkade**.

Green Parking Lot means a **Surface Parking Lot** with limited impermeable material, substantial tree cover and plant material, and surface runoff directed toward **Landscaped** basins, thus encouraging on-site stormwater management and eliminating or reducing the need for mechanical drainage connections.

Environmental performance targets are required to be considered in the design including measures for reducing the urban heat island effect, improving pedestrian infrastructure, comfort and safety, using energy efficient fixtures and recycled materials, managing stormwater runoff on-site, and preserving and enhancing the environment.

Green Roof means the installation of vegetated roofs and **Site** or **Building** systems that either reduce the amount of stormwater runoff and/or reuse stormwater on-site or within **Buildings**.

"Extensive" **Green Roofs** are lightweight **Green Roof** retrofits on an existing **Building's** roof or as a design feature of new **Buildings**, and cannot usually accommodate foot traffic except for maintenance activities.

"Intensive" **Green Roofs** usually involve a deeper soil layer, and are easier to incorporate into new **Building** designs where adequate structural support can be included.

Gross Floor Area (GFA) means the sum of the **Floor Areas** of all floors of a **Building**.

Ground Floor means the first **Storey** of a **Building** or **Structure**.

Ground-Oriented (Commercial) means any commercial premises that have an entrance or exit door to the exterior of the **Building**, entered directly from a fronting publicly accessible **Street**, walkway, or open space (i.e., without passing through a shared indoor lobby or corridor). **Ground-oriented Commercial Units** can also have a second access and egress via a shared lobby or common corridor.

Ground-Oriented Dwelling Unit means **Dwelling Units** of one or more **Storeys** in **Height**, each of which has its primary entrance (i.e., front door) on the exterior of the **Building**, entered directly from a fronting publicly accessible **Street**, walkway, or open space (i.e., without passing through a shared indoor lobby or corridor). Ground-oriented housing can also have a second access and egress via a shared lobby and/or common corridor.

H

Hard Surfaced means covered with a durable, dust-free material which may be permeable or impermeable.

Typical examples include concrete, asphalt, pavers, grasscrete, or similar material but excludes gravel, clay and decorative rock.

Height with respect to a **Building** refers to the vertical distance between **Finished Grade** and the highest point of the **Structure** of a flat roof, or the mid-point of a sloping roof.

Diagram 2.3 — Height Measurements

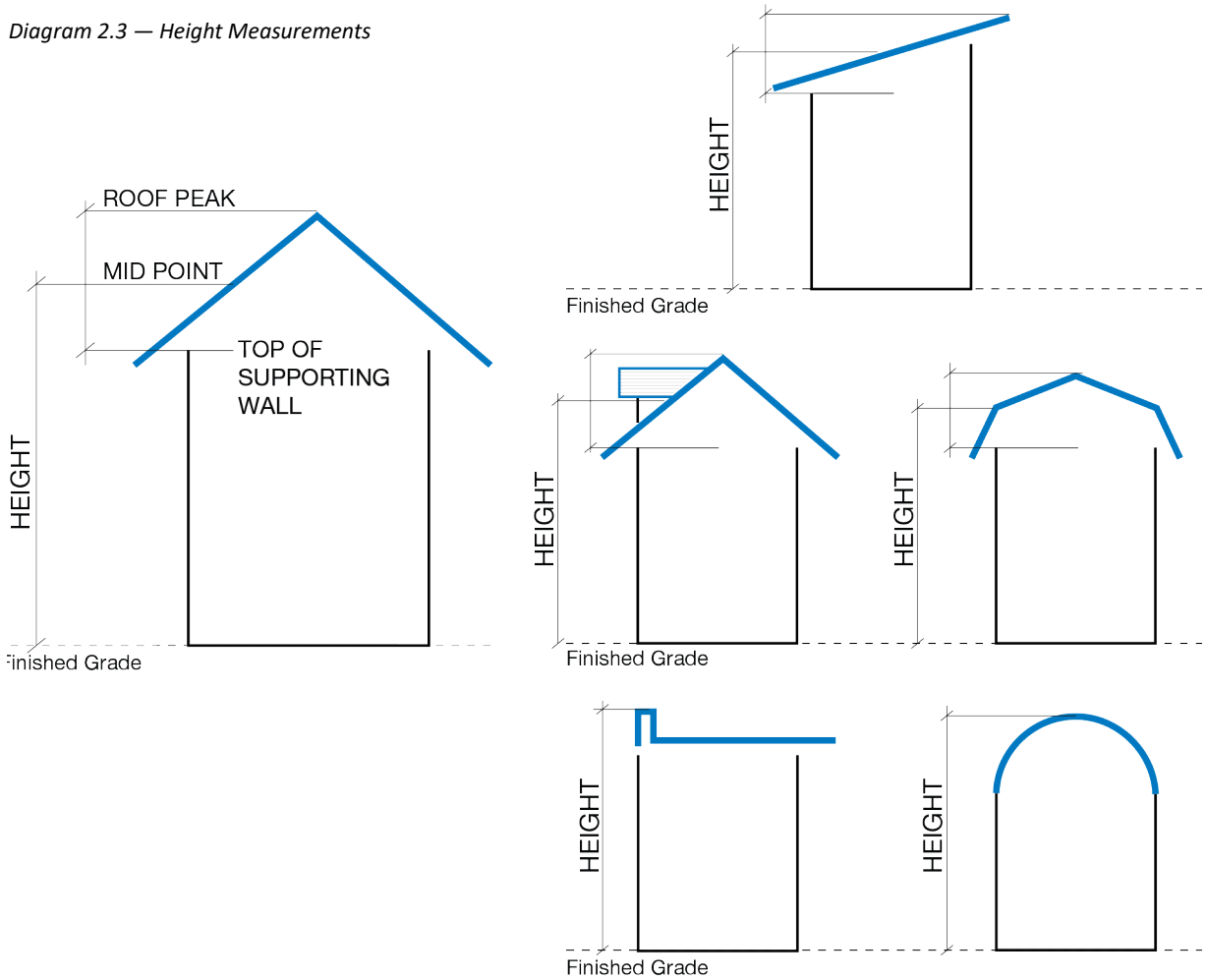

Hillside Area means land in its natural state having a slope angle of 10% and greater for an elevation change of 6 m or more.

Home Based Child Care means a **Home Based Business** providing temporary daytime care and supervision for up to 8 non-resident children.

I

Identification Sign means a sign that contains only the name and addresses of a **Building**, **Site**, premises or occupants and the activity carried on in the **Building**, **Site** or premises.

Inclusive Bike Parking means a horizontal **Bike Parking Space** that accommodates non-standard bikes, or spaces for bikes that are difficult to lift.

Typical examples of non-standard bikes include cargo bikes, fat tire bikes, e-bikes, handcycles, or bikes with trailers.

Interior Lot means a **Lot** other than a **Corner Lot**.

Interior Side Lot Line means the **Lot Line** other than a **Front Lot Line**, **Flanking Side Lot Line** or **Rear Lot Line**.

Interior Side Setback means the minimum distance specified in this bylaw between a **Building** or **Structure** and an **Interior Side Lot Line**. An **Interior Side Setback** is not an **Interior Side Yard**.

Interior Side Yard means the portion of a **Site** abutting an **Interior Side Lot Line**, extending between the **Front Yard** and the **Rear Yard**, and located between the **Interior Side Lot Line** and the nearest wall of the **Principal Building**, not including projections.

Interior Site means a **Site** other than a **Corner Site**.

L

Landscape Buffer an area where **Landscaping** is installed, or suitable existing natural vegetation is preserved, to provide screening or privacy, abate land use impacts or minimize perceived building massing.

Landscaping means the preservation or modification of the natural features of a **Site** through the placement or addition of any or a combination of the following:

i. soft Landscaping elements such as trees, shrubs, ground covers, lawns, gardens, or ornamental plantings of perennials or annual flowers;
ii. decorative **Hard Surfacing** elements in the form of patios, **Pathways**, and paths consisting of materials such as bricks, pavers, shale, crushed rock, or other suitable materials, excluding monolithic concrete and asphalt; and
iii. **Architectural Elements** such as decorative fencing, walls, trellises, pergolas, permanent site furniture, or sculpture.

In all cases where a combination of soft landscaping, **Hard Surfacing** or **Architectural Elements** are used, soft landscaping must constitute a majority of the Landscaping area.

Laneway means an improved highway more than 3.0 m but not greater than 8.0 m in width that is intended for access to the rear of a **Lot**.

Loading Space means an on-site area reserved for temporary parking for the purpose of loading or unloading goods and materials from a **Commercial Vehicle**.

Long-term Bike Parking means a weather-protected, secure location for the storage of bicycles where access to the enclosure is limited to authorized individuals only.

Typical examples include a room within a housing-based **Building** or workplace, an enclosure within a **Parkade** or a cluster of bike lockers or cages.

Lot means a parcel of land, which is legally defined either by registered plan or description.

Lot Area means the total area within the **Lot Lines** of a **Lot**. The panhandle portion of a **Panhandle Lot** shall be excluded from the area for the purpose of determining compliance with minimum **Lot Area** specified in this bylaw for subdivision.

Lot Line means the legally defined boundary of any **Lot**.

Lot Width means the horizontal distance between **Side Lot Lines** of a **Lot** measured at the **Front Setback** for a **Principal Building** or **Structure**, except:

i. in the case of a **Reverse Pie Shaped Lot**, the horizontal distance between the **Side Lot Lines** measured at the **Rear Setback** for a **Principal Building** or **Structure**; or
ii. in the case of a **Panhandle Lot**, the horizontal distance between the **Side Lot Lines** measured at the **Front Setback** for a **Principal Building** or **Structure** excluding the panhandle.

M

Main Street Development means human scale and people-focused development that creates an active street front and comfortable public realm through:

i. **Building** or **Podium** placement close to the **Street**;
ii. orienting **Buildings** and main entrances towards the **Street**;
iii. high quality **Building** design that provides visual interest, weather protection, and articulation to minimize the perception of massing;
iv. transparent windows along the **Ground Floor** to support pedestrian interaction and visible storefront displays; and
v. locating **Vehicle** parking underground or to the rear or side of **Buildings**.

Mobile Home Park means premises used for the placement of two or more **Mobile Homes**.

Mobile Home Space means an area designated within a **Mobile Home Park** for the placement of a **Mobile Home**, including access to an internal road and space for the exclusive **Accessory Use** by the **Owner** or occupant of that **Mobile Home**.

N

N/A means not applicable.

Natural Boundary means the visible high-water mark of any lake, river, stream or other body of water where the presence and action of the water are so common and usual, and so long continued in all ordinary years, as to mark on the soil of the bed of the body of water a character distinct from that of its banks, in vegetation, as well as in the nature of the soil itself.

Natural Grade means the elevation of the ground surface in its natural state, before human alteration, or on sloping or irregular sites, the angled plane, before human alteration.

Net Floor Area (NFA) means the **Gross Floor Area** exclusive of areas used exclusively for storage (storage area must be a common facility accessible by more than one **Owner**), service to the **Building**, attics, **Garages**, carports, breezeways, porches, **Balconies**, exit stairways, common/public corridors, **Parkades**, terraces, **Common Amenity Areas**, and **Building** mechanical systems.

In the case of **Supportive Housing**, communal dining and kitchen facilities are excluded.

O

Owner means the registered **Owner** of an estate in fee-simple or their agent authorized in writing, and includes the tenant for life under a registered life estate, the registered holder of the last registered agreement for sale, and the holder or occupier of land held in the manner described in the *Community Charter*.

P

Panhandle Lot means a **Lot** which has its primary legal access from a **Street** through a narrow strip of land which is an integral part of the **Lot**.

Parapet or **Parapet Wall** means that portion of a perimeter **Building** wall that rises above the level of the roof.

Parkade means a **Structure** that includes one or more **Parking Areas** and one or more **Drive Aisles**. A **Parkade** may include **Loading Spaces** or **Bike Parking Spaces** and does not include a **Surface Parking Lot.**

Parking Area means an area that is used for **Vehicle** parking. A **Parking Area** may include one or more **Vehicle** parking spaces, a **Surface Parking Lot**, a **Parkade**, a **Garage**, one or more **Loading Spaces**, one or more **Bike Parking Spaces**, but does not include a **Vehicle** access, a **Driveway**, or and a **Drive Aisle**.

Party Wall means a wall jointly **Owned** and jointly used by two parties under easement agreement or by right in law and erected at or upon a line separating two parcels of land, each of which is, or is capable of being, a separate real estate entity.

Pathway means a **Hard Surfaced** path of travel that is located on private property and that cannot be accessed by **Vehicles** except authorized service **Vehicles**.

Pick-up / Drop-off Area means an on-site **Parking Area** reserved for temporary parking for the purpose to pick-up or drop-off of passengers, or goods and materials, from a **Vehicle**.

Typical examples of users include taxi services, ride-hailing services, food and prescription delivery services, and shipping delivery services.

Pie Shaped Lot means a **Lot** which is generally configured such that the **Lot Width** at the **Rear Lot Line** is greater than at its **Front Lot Line**.

Pie Shaped Lot (Reverse) means a **Lot** which is generally configured such that the **Lot Width** at the **Front Lot Line** is greater than at its **Rear Lot Line**.

Platform Structure means a **Structure** intended for use as an outdoor **Amenity Area** that may project or be recessed from the wall of a **Building**. It may include guardrails, **Parapet Walls**, pergolas, or similar features.

Typical examples include: **Balconies**, **Decks**, porches, raised patios and verandas. This definition does not include a **Rooftop Terrace**.

Podium means the base of a **Tower** that:

i. occupies a larger **Floor Plate** than the rest of the **Tower**; and
ii. does not exceed six **Storeys** in **Height**, unless otherwise specified in a zone.

Principal Use means the main or primary **Use** of land, **Buildings** or **Structures** which is provided for in the list of permitted **Uses** in the zones of this bylaw.

Privacy Screen means a **Structure** located on a **Platform Structure** or **Rooftop Terrace** that provides a visual barrier by obscuring sightlines from abutting **Sites**, **Streets**, **Laneways** or **Alleys**.

Typical examples include lattices, trellises, **Parapet Walls**, wooden boards, translucent glass, or any combination of these or similar features. Railings, balustrade systems and fences are not considered **Privacy Screens**.

Private Amenity Area means that portion of a **Lot** not occupied by **Parking** or **Vehicle Areas**, **Buildings**, accessible to, and suitable for gardens, **Landscaping**, and recreational use by **Building** tenants or residents. A **Private Amenity Area** also includes any **Decks**, patios or **Balconies** designed for the exclusive use of an individual **Dwelling Unit**. **Private Amenity Areas** must not be located within the required **Setback** areas.

Private Water System means a privately-owned utility system certified as a public convenience and necessity under the *Water Utility Act* that provides water services to more than a single **Lot**.

Public Amenity Area means an **Amenity Area** including open spaces, **Parks**, plazas, locations of art, seating areas, and other amenities at ground level that are complementary to the **Adjacent** streetscape and are visually and physically accessible to the public.

Public Park and Ride Facility means a **Surface Parking Lot** or **Parkade Owned** by the City of Vernon that is intended to serve a **Surface Parking Lot**, where drivers leave their **Vehicles** in order to take public transit.

Public Space means space that is part of an establishment and which is open to the public and not restricted to only employees. **Public Space** includes any private non-sale hospitality area where products manufactured within the premises are provided to private groups for tasting and sampling. This definition does not include kitchens, administration **Offices**, bathrooms, or food or drink preparation areas.

R

Rear Lot Line means:

i. the **Lot Line** that is furthest from and opposite the **Front Lot Line**; or
ii. where there is no such **Lot Line**, the point of intersection of any two **Lot Lines** that are furthest from and opposite the **Front Lot Line**.

Rear Setback means the minimum distance specified in this bylaw between a **Building** or **Structure** and a **Rear Lot Line**. A **Rear Setback** is not a **Rear Yard**.

Rear Yard means the portion of a **Site** abutting the **Rear Lot Line**, extending across the full width of the **Lot**, and located between the **Rear Lot Line** and the nearest wall of the **Principal Building**, not including projections.

Recreational Vehicle means a **Vehicle** designed for recreation and travel purposes.

Typical examples include motor homes, travel trailers, fifth wheel trailers, truck campers, tent trailers, park model recreational vehicles, or camper van conversions.

Religious Assembly means the use of premises for the assembly of persons for worship and related religious activities.

Typical examples include chapels, churches, convents, gurdwaras, monasteries, mosques, parish halls, synagogues, and temples.

Rooftop Terrace means a **Structure** located on a roof of a **Building** that is intended for use as an outdoor **Amenity Area** that may be surrounded by guardrails, **Parapet Walls** or similar features and, in the case of a **Dwelling Unit**, is located above the uppermost habitable room.

A **Rooftop Terrace** does not include a **Platform Structure**.

Row Housing means a **Building** that contains three or more **Principal Dwelling Units** joined in whole or in part at the side, the rear, or the side and the rear, with none of the **Principal Dwelling Units** being placed over another. Each **Principal Dwelling Unit** has separate, individual, and direct access to ground level.

S

Seasonal Shelter means a **Community Service** activity whose primary purpose is to provide seasonal accommodation for people requiring shelter for a temporary period. This may also include health, cultural, or recreational programming, individual support services, meal service, and administrative **Offices**, where such services support the primary purpose of the **Seasonal Shelter**.

Secondary Suite means a **Dwelling Un**it that is subordinate to, and located within, a **Building** used for **Detached Housing**, **Semi-detached Housing** or **Townhouses**.

Secondary Use means those **Uses** in the lists of **Secondary Uses** in the zones of this bylaw which may be conducted only in conjunction with a **Principal Use**.

Setback means the minimum distance specified in this bylaw between a **Building** or **Structure** and a **Lot Line**. A **Setback** is not a **Yard**.

Shipping Container includes intermodal metal cargo containers whether or not modified, and bodies of transport trucks or straight truck boxes, whether in their original form or modified.

Short-term Bike Parking means a convenient and publicly-accessible parking location for bicycles that can be easily located from the main entrance of the **Building** it serves.

Typical examples include bicycle racks or bicycle corrals.

Side Lot Line means any **Lot Line** which is not a **Front** or **Rear Lot Line**.

Side Setback means the minimum distance specified in this bylaw between a **Building** or **Structure** and a **Side Lot Line**. A **Side Setback** is not a **Side Yard**.

Side Yard means the portion of a **Site** abutting the **Side Lot Line**, extending across the full depth of the **Lot**, and located between the **Side Lot Line** and the nearest wall of the **Principal Building**, not including projections.

Site means an area of land consisting of one or more abutting **Lots**.

Site Coverage means the percentage of the area of a **Lot** or **Lots** that is covered by **Buildings** or **Structures** including **Accessory Buildings** or **Structures** (including carports and covered patios which are 23 m^2 or larger).

Sleeping Unit means a room in a housing-based **Building** that is used primarily for sleeping and relaxation for a maximum of two persons and containing no cooking or sanitary facilities. **Sleeping Units** have shared access to facilities such as cooking, dining, laundry, sanitary facilities, or general living facilities in the same housing-based **Building**.

Stacked Townhouses means a **Building** in which **Townhouses**, are arranged vertically so that **Townhouse** units are placed wholly or partially over other **Dwelling Units**. Each **Dwelling Unit** will have an individual access to outside, not necessarily at **Grade**.

Stepback means the horizontal distance a **Building** facade is stepped back from the **Building** facade immediately below it.

Storey means that portion of a **Building** that is between the top of any floor and the top of the floor above it.

If there is no floor above, the **Storey** is the portion of the **Building** that is between the top of any floor and the ceiling above it.

If the top of the floor directly above a **Basement** is greater than 1.83 m above **Grade**, the **Basement** is considered a **Storey**.

Street means any public roadway other than a **Laneway** or **Alley** and includes boulevards and sidewalks.

Street Wall means a series of continuous **Building** facades that are typically parallel to a **Street**.

Structure means a construction of any kind whether fixed to or supported by or sunk into land or water including but not limited to towers, flag poles, swimming pools, docks, signs and tanks, and excludes areas of hard surfacing such as concrete, brick or unit pavers, turfstone, asphalt or similar materials.

Structural Alteration means any change or addition to the supporting members of a **Building** or **Structure**, including but not necessarily limited to the foundation, bearing walls, rafters, columns, beams or girders where the total value of the change or alteration does not exceed 75% of the assessed value of the existing **Building** or **Structure**.

Studio Apartment means a **Dwelling Unit** in which the sleeping and living areas are combined.

Surface Parking Lot means an unenclosed area wholly at ground level that includes one or more **Vehicle** parking spaces and one or more **Drive Aisles**. It may also include one or more **Loading Spaces** and one or more **Bike Parking Spaces**.

T

Tandem Parking means two **Vehicle** parking spaces, one behind the other, with a common or shared point of access to a **Drive Aisle**, **Laneway**, **Alley** or **Street**.

Temporary Shelter Services means the provision of communal, transient accommodation sponsored or supervised by a public authority or non-profit agency intended to provide basic lodgings for persons requiring immediate shelter and assistance for a short period of time. This **Use** includes an ancillary **Supportive Housing Use** if the majority of the **Gross Floor Area** is used for **Temporary Shelter Services**.

Typical examples include hostels and over-night shelters.

TOD Area Map means the maps identified in Schedule B of this bylaw that specifies the **TOD Areas** that apply to specific lands within the City.

Tower means, unless otherwise specified in a zone, a **Building** greater than 28.0 m in **Height**, with special design constraints applying to life/safety measures, structural support, wind, sunlight, and skyline impacts.

Townhouses means a **Building** containing three or more **Dwelling Units**, which each having a direct entrance at **Grade**.

For the purposes of this bylaw, the **Use** of **Townhouses** shall include the **Use** of **Row Housing**.

Transit Oriented Development Areas (TOD Areas) means the areas within the City that are required to be designated under the *Local Government Act* for the location of high-density, mixed-use development within walking distance of transit services.

U

Urban Containment Boundary (UCB) means a geographic boundary that separates urban from rural land **Uses**. It identifies an area where growth is intended to be directed.

Urban Services means the provision of utility infrastructure consisting of a **Community Water System**, a storm drainage system, a **Community Sewer System**, and paved roadways **Adjacent** to the **Site**.

Use means the purposes or activities for which a parcel of land or its **Buildings** are designed, arranged, developed or intended, or for which it is occupied or maintained.

V

Vehicle means any motor vehicle as defined in the *Motor Vehicle Act*.

Violation Notice means the document issued by the City to a person who has committed an offence under Section 3 of this bylaw.

W

Walkout Basement means a portion of a **Building** which is partly underground, and which has an entrance or exit at separate **Grade** levels between the **Front** and **Rear Yards**. The absolute **Height** level from the front of the **Building** must be less than the absolute **Height** level at the rear of the **Building**.

Diagram 2.4 — Walkout Basement

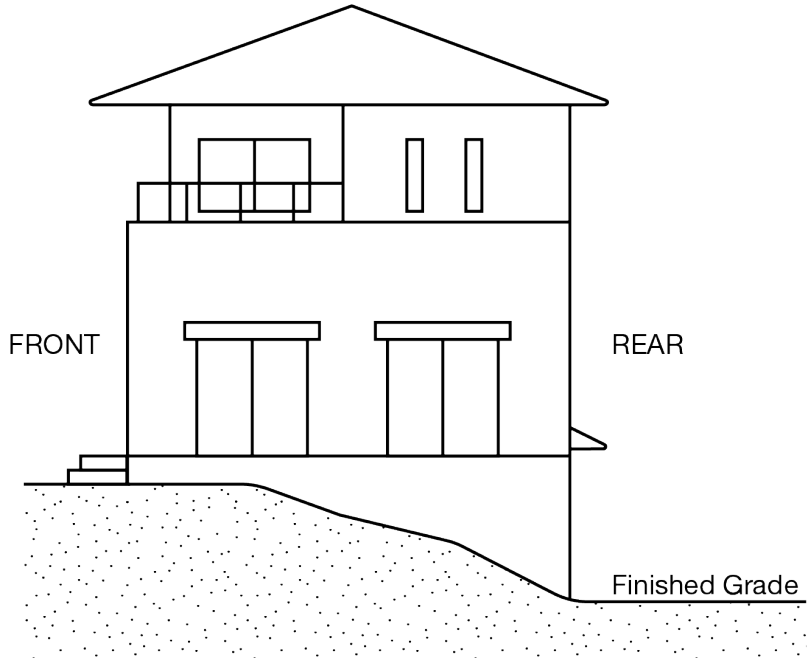

Watercourse means any natural depression with visible banks, which contains water at some time, and includes any lake, river, stream, creek, spring, ravine, swamp, gulch, coulee, wetland, or surface source of water, including intermittent streams.

Water Retention Structure means a **Structure** designed to retain at least 0.378 m^3 of water.

Typical examples include swimming pools, skating rinks, ornamental ponds, hot tubs, whirlpools, and spas.

Wet Bar means a counter with a sink and cabinets used for preparing beverages and snacks not requiring cooking.

Wide Lot means a **Lot** whose width exceeds its depth.

Y

Yard means the part of a **Lot** that is unoccupied by any portion of a **Building** or **Structure**. A **Yard** is not a **Setback**.

Year-round Shelter means a **Community Service** activity whose primary purpose is to provide accommodation for people requiring shelter for a temporary period that may exceed one season. This may also include health, cultural, or recreational programming, individual support services, meal service, and administrative **Offices**, where such services support the primary purpose of the **Year-round Shelter**.

SECTION 3: Enforcement

3.1 General

The **Director of Planning & Community Services**, building officials, and bylaw enforcement officers are authorized to enforce this bylaw.

3.2 Right of Entry

3.2.1 The **Director of Planning & Community Services**, building officials, and bylaw enforcement officers may enter onto any land or into any **Building** at all reasonable hours in order to inspect the same and to ascertain whether the provisions of this bylaw have been carried out.

3.2.2 The authority to enter into a **Building** that is a private dwelling may be exercised only in accordance with s. 16(5) of the *Community Charter*.

3.2.3 No person shall interfere with or obstruct the entry onto any land or into any **Building** to which entry is made or attempted pursuant to the provisions of this bylaw.

3.3 Prohibitions

3.3.1 No person shall contravene, cause, suffer, or permit a contravention of this bylaw.

3.3.2 No person shall commence or undertake a **Use** in any zone that is not permitted by this bylaw.

3.3.3 No person shall construct, make an addition to or alter a **Building** or **Structure**, which is not permitted by this bylaw.

3.3.4 No person shall subdivide land except in accordance with this bylaw.

3.3.5 No person shall contravene a condition of a permit issued under this bylaw.

3.3.6 No person shall modify any description, specifications, or plans that were the basis for the issuance of any permit by the **Director of Planning & Community Services**, building official or Council, or the approval of a subdivision by the approving officer.

3.3.7 No person shall authorize or carry out any construction that is at variance with the description, specifications or plans that were the basis for the issuance of a building permit unless the permit has been amended by a building official.

3.3.8 No **Owner**, lessee, tenant, or other person shall:

.1 park or store a **Commercial Vehicle** in excess of 5,500 kg licensed gross vehicle weight on a **Lot** in a housing zone;

.2 park or store a **Recreational Vehicle** in excess of 30 ft in length on a **Lot** in a housing zone, except in a fully enclosed permanent **Building**, provided that short term parking of no more than two consecutive days for the purposes of loading, unloading, service or repair is permitted and **Recreational Vehicles** may be parked within an area designated for such parking in a development permit;

.3 park or store more than one **Recreational Vehicle** on a **Lot** in a housing zone;

.4 park or store more than two **Commercial Vehicles** on a **Lot** in a housing zone;

.5 park or store an inoperable or unlicensed **Vehicle** for more than 30 consecutive days on a **Lot** in a housing zone; or

.6 park or store more than six **Vehicles** of any type outdoors on a **Lot** in a housing zone.

3.3.9 No person shall place or store construction materials on a **Lot** in a housing zone unless a building permit has been issued for the construction of a **Building** or **Structure** on the **Lot** and the permit is not expired, except for materials related to minor **Building** or **Structure** repairs not requiring a building permit.

3.3.10 No person shall store on a **Lot** in a housing zone a quantity of flammable or combustible liquid exceeding 205 L in volume.

3.4 Penalties

3.4.1 Every person who violates a provision of this bylaw commits an offence and is liable on summary conviction to a penalty not exceeding Fifty Thousand Dollars ($50,000.00) and the costs of prosecution.

3.4.2 Each day a violation of the provisions of this bylaw exists or is permitted to exist shall constitute a separate offence that is subject to the maximum penalty indicated in 3.4.1.

SECTION 4: Development Regulations

4.1 Swimming Pools

4.1.1 Swimming pools shall not be located in a **Front Yard** or a **Flanking Side Yard**.

4.1.2 Above ground swimming pools shall meet the siting requirements of **Accessory Buildings**.

4.1.3 At grade swimming pools shall be located a minimum of 1.0 m from a **Side Lot Line** and a **Rear Lot Line**.

4.2 Projections into Yards

4.2.1 Chimneys, cornices, leaders, gutters, pilasters, belt courses, sills, bay windows, a cantilevered section of a **Building**, portions of a **Building** on a foundation or ornamental features may project into a **Setback** provided such projections do not exceed 0.5 m.

4.2.2 Unenclosed steps, eaves, **Awnings**, **Decks**, **Canopies**, **Balconies**, or porches may project into a **Setback** provided such projections do not exceed 0.5 m. In the case of a **Front** or **Flanking Side Yard Setback**, 1.0 m.

4.2.3 Utilities, storage tanks, underground parking and similar **Structures** constructed entirely beneath the surface of the ground may encroach into **Setbacks** provided such underground encroachments do not result in a **Grade** inconsistent with abutting properties and the encroachments are covered by sufficient soil depth or surface treatment to support **Landscaping**.

4.3 Accessory Development

4.3.1 No person shall erect or permit to be erected an antenna, satellite dish/receiver, radio or television mast in a housing zone:

.1 that is located in a **Front Yard** or **Side Yard** or projects over any **Lot Line**; and

.2 exceeds 11 m (36 ft) in **Height**,

unless the property **Owner** or tenant holds a current Radio Authorization issued by *Industry Canada.*

Accessory Buildings in Housing Zones

4.3.2 No **Accessory Buildings** or **Structures**, except for fences, are allowed in a **Front Yard** unless they contain a permitted **Accessory Dwelling Unit** or unless the **Lot** is a **Double Fronting Lot**.

4.3.3 An **Accessory Building** or **Structure** shall not be used as a **Dwelling Unit** unless it is a permitted **Accessory Dwelling Unit** in which case the conditions of use pertaining to **Accessory Dwelling Units** contained in Section 5 of this bylaw shall apply.

4.3.4 The total **Lot** coverage of **Accessory Buildings** or **Structures** shall not exceed 14% of the **Lot Area**, or have a total footprint greater than 100 m^2, whichever is less.

Shipping Containers

4.3.5 **Shipping Containers** shall meet the siting requirements of an **Accessory Building**.

4.3.6 No person shall authorize or place a **Shipping Container** on a **Lot** in a housing zone for more than 30 days per calendar year.

4.3.7 **Shipping Containers** placed on a **Lot** in a non-housing zone for more than 30 days per calendar year shall be screened from view of any **Street**, **Laneway** or **Alley** and from **Adjacent Lots**.

4.3.8 **Shipping Containers** may only be stacked up to two containers high.

4.4 Height and Grade

Buildings and Structures

4.4.1 In determining whether a **Building** conforms to the maximum **Height** permitted in any zone, **Structures** such as antennae, chimney stacks, water towers, wind machines, monuments, observation and transmission towers, farm silos, steeples, elevator housings, roof stairway entrances, railings constructed with translucent materials, ventilating equipment, skylights, or flagpoles for federal, provincial, or municipal flags shall not be considered for the purpose of determining the **Height**.

4.4.2 No person shall erect or permit to be erected an antenna, satellite dish/receiver, radio or television mast in a housing zone that exceeds 11 m (36 ft).

4.4.3 For the purpose of calculating **Height**, a flat roof will be considered any roof with either a single pitch or a pitch of 4:12 or less.

4.4.4 The **Finished Grade** shall to the extent possible, retain the natural contour of the land (**Natural Grade**), minimize the necessity to use retaining walls and ensure positive drainage away from abutting properties.

4.5 Services

4.5.1 No **Building**, **Structure**, or **Lot** in any zone shall be used for any purpose that requires **Street** access or services unless:

.1 the owner has obtained proper authorization to have the required services installed and has installed such services in accordance with *the City of Vernon Subdivision & Development Servicing Bylaw No. 3843*; and

.2 the **Lot** has actual physical access from the **Street**.

4.6 Lighting

4.6.1 Outdoor lighting for any development shall be located and arranged so that no direct rays of light are directed at any **Adjacent Lots**, **Streets**, walkways or interfere with the effectiveness of any traffic control device.

4.6.2 No flashing or blinking exterior lighting shall be permitted.

4.6.3 No exterior neon lighting shall be permitted in housing zones.

4.6.4 All direct and ambient lighting shall be shielded in housing zones so as to not shine beyond the boundaries of the **Lot**.

4.6.5 **Site** areas with public access shall be lit in keeping with the principles of crime prevention through environmental design and require **Site** lighting as is necessary to encourage pedestrian safety and allow casual surveillance from **Adjacent Buildings**, **Streets**, **Parking Areas** and walkways.

4.6.6 Lighting posts are not to exceed the lesser of the **Height** of the **Principal Building** or 7.0 m.

4.6.7 Lighting systems for commercial, industrial and community developments are to include automated controls allowing for a reduction in lumen levels and energy use during hours when **Site** is not in active use.

4.7 Setback from Provincial Highways

4.7.1 All **Buildings**, **Structures** and **Landscaping** excluding perimeter fencing (garden walls and fences) on **Lots** abutting Provincial Highways shall not be closer to the highway than the required Provincial Highway setbacks.

4.8 Rooftop Screening

4.8.1 Rooftop mechanical and electrical equipment in zones other than agricultural zones shall be screened from view from a **Street** or **Adjacent Lots** at grade.

4.9 Hillside Development Areas

4.9.1 No construction of a **Building**, **Structure** or swimming pool is permitted on any slope of 30% or greater.

4.9.2 The calculation of **Dwelling Units** per hectare or **Floor Area Ratios** performed for the purposes of this bylaw shall for establishing the **Lot Area** exclude all portions of a **Lot** that cannot be used safely for the **Use** intended due to excessive slope, soil conditions or other hazards and for that purpose a building official may require an applicant for a building permit who is being required to provide a report under s 56 of the *Community Charter* in respect of land that is subject to or is likely to be subject to erosion, land slip, rockfalls or subsidence to instruct their qualified professional to indicate all such portions, and their areas in square meters, on a plan of the **Lot**.

SECTION 5: Specific Use Regulations

5.1 Application

5.1.1 In addition to the regulations for the specific zones where the specific **Uses** are allowed, the specific **Use** regulation shall apply to all development unless otherwise exempted in this section.

5.1.2 Where these regulations may be in conflict with development regulations in any zone or the general regulations, these specific **Use** regulations shall take precedence.

5.2 Minimum Dwelling Unit Size

5.2.1 The minimum size of a **Dwelling Unit** is 30 m^2 (323 ft^2) **Net Floor Area**.

5.3 Home Based Businesses

5.3.1 All **Home Based Businesses** shall be **Accessory Uses** and must comply with the following:

.1 a **Home Based Business** shall be conducted within a **Principal Building** and/or one **Accessory Building** or **Structure** and no outdoor storage for, or outdoor operation of, a **Home Based Business** shall be permitted;

.2 no variation from the housing character and appearance of land or **Buildings** shall be permitted and no external structural change to any **Principal Building** or **Structure** for the purpose of accommodating a **Home Based Business** shall be permitted;

.3 the **Home Based Business** shall not generate more than two clients to the **Site** from which the business is being operated at any given time;

.4 no person other than residents of the **Dwelling Unit** shall be engaged in the **Home Based Business**;

.5 all parking spaces for customers of the **Home Based Business** must be provided for on the **Lot** where the **Home Based Business** is operating; and

.6 the total area of **Home Based Businesses** shall not occupy more than 30% of the **Floor Area** of the **Dwelling Unit** up to a maximum area of 50 m^2.

5.4 Secondary Suites & Accessory Dwellings

5.4.1 Secondary Suites

5.4.1.1 The **Gross Floor Area** of a **Secondary Suite** shall not exceed 49% of the **Gross Floor Area** of the respective **Dwelling Unit** it is **Accessory** to.

5.4.1.2 A **Secondary Suite** must be provided with the minimum **Private Amenity Area** required in the applicable zone in addition to any **Private Amenity Areas** provided for any other **Dwelling Units**.

5.4.1.3 **Secondary Suites** must have a separate entrance with exterior access, except where access is provided through a shared hall.

5.4.1.4 A 1.5 m wide **Barrier-free**, lit, and clearly marked pathway from the **Street** to the main entrance of the **Secondary Suite** must be provided.

5.4.2 Accessory Dwelling Units

5.4.2.1 The **Net Floor Area** of an **Accessory Dwelling Unit** must not exceed 100 m². Where an **Accessory Dwelling Unit** is located within a larger **Accessory Building**, the total combined footprint of the **Accessory Building** and the **Accessory Dwelling Unit** must not exceed 150 m².

5.4.2.2 The maximum **Height** of an **Accessory Building** with an **Accessory Dwelling Unit** is 8.0 m.

5.4.2.3 An **Accessory Dwelling Unit** must be provided with the minimum **Private Amenity Area** required in the applicable zone in addition to any **Private Amenity Areas** provided for any other **Dwelling Units**.

5.4.2.4 A 1.5 m wide **Barrier-free**, lit, and clearly marked pathway from the **Street** to the main entrance of the **Accessory Dwelling Unit** must be provided.

5.4.2.5 Rooftop **Decks** or patios are not permitted on **Accessory Dwelling Units**.

5.5 Short-term Rental Accommodation

5.5.1 No more than one booking or reservation for **Short-term Rental Accommodation** is permitted in each **Dwelling Unit** at one time.

5.5.2 No more than two adults may occupy a **Sleeping Unit** used for **Short-term Rental Accommodation**.

5.5.3 Parking must be provided in accordance with the parking and loading regulations of Section 7 and may not use required visitor parking spaces.

5.6 Bareland Strata Developments

5.6.1 Bareland strata developments shall comply with the following regulations:

.1 bareland strata developments shall comply with the minimum **Lot Area**, **Site Coverage**, **Landscaping**, **Lot Width**, **Height** and **Setbacks** as stated for fee simple **Lots** in the applicable housing zone; and

.2 a maximum of one **Accessory Building** is permitted per **Dwelling Unit**.

5.7 Vehicular-oriented Uses

5.7.1 The minimum **Lot Width** for a vehicular-oriented **Use** shall be 30.0 m.

5.7.2 **Lot Area** shall be provided as follows:

.1 the minimum **Lot Area** for any development incorporating a vehicular-oriented **Use** shall be 930 m^2 and the maximum **Site Coverage** shall be 50%;

.2 the minimum **Lot Area** for a service station shall be 1,200 m^2 and the maximum **Site Coverage**, including pump islands, shall not exceed 75%;

.3 the minimum **Lot Area** for **Drive-through Vehicle Services** shall be 140 m^2 of **Lot Area** not covered by **Buildings** for each service bay; and

.4 where 2 or more of these **Uses** are part of a **Mixed-Use Housing** development on the same **Site**, the total **Lot Area** requirements shall be the sum of the requirements of the **Uses** calculated separately.

5.7.3 Queuing space shall be provided as follows:

.1 for **Drive-through Services**, such as for food and banking, a minimum of 3 in-bound and 2 out-bound queuing spaces shall be provided for the drive-through lane;

.2 for **Drive-through Vehicle Services**, excluding car washes, a minimum of 2 in-bound and 1 out-bound queuing spaces shall be provided for each service bay; and

.3 each queuing space shall be a minimum of 6.0 m in length and 3.0 m in width. Queuing lanes shall provide sufficient space for turning and maneuvering.

5.7.4 **Minor Fuel Stations** shall adhere to the following:

.1 all pump islands shall be located at least 6.0 m from any **Lot Line** or **Parking Area** on the **Site** or **Laneways** intended to control traffic circulation on the **Site**;

.2 a **Canopy** over a pump island shall not extend to within 3.0 m of any **Lot Line**;

.3 the **Canopy** area shall not constitute part of the **Site Coverage**; and

.4 where the **Canopy** is a sign, it must comply with the provisions of *City of Vernon Sign Bylaw No. 4489*.

5.8 Car Washes

5.8.1 Car washing establishments shall provide upstream **Vehicle** queueing for a minimum of 4 **Vehicles** per washing bay except it is a minimum of 2 **Vehicles** where the washing bay is coin operated and the **Vehicle** is manually washed by an occupant of the **Vehicle**.

5.8.2 Upstream queueing spaces shall be a minimum of 6.0 m in length and 3.0 m in width.

5.8.3 The minimum area for a car wash shall be determined on the basis of 100 m^2 of space not covered by **Buildings** for each car wash bay.

5.9 Temporary Use Permits

5.9.1 Designated Areas:

.1 temporary **Use** permits are permitted on any **Lot** within the City.

5.9.2 Conditions:

Temporary **Use** permits will be subject to conditions regarding the **Use** of the land and a termination date of the permit. In considering the issuance of a temporary **Use** permit, Council will use criteria it deems reasonable which may include:

.1 that the temporary **Use** will operate at an intensity of **Use** suitable to the surrounding area;

.2 that the temporary **Use** will be compatible with regard to **Use**, design and operation with other surrounding land **Uses**;

.3 that the temporary **Use** will operate on a temporary basis only and include plans, or a letter of undertaking, to terminate the **Use** prior to the expiry date of the permit; and

.4 a financial security to ensure the temporary **Use** is removed and the site is appropriately restored.

5.10 Temporary Shelter Services

5.10.1 Adequate outdoor and indoor storage space shall be provided as follows:

.1 a minimum of outdoor storage space of 1.5 m^2 per shelter bed to a maximum of 25 m^2 is required;

.2 if storage is located outdoors, it shall be screened from public view and **Streets**;

.3 the secure outdoor space shall be well lit (but not intrusive to **Adjacent** properties) with natural surveillance from within the **Building**; and

.4 secure indoor storage locker space of 0.20 m^2 per shelter bed shall be provided.

5.10.2 Adequate interior spaces and operating procedures to avoid sidewalk line-ups for access shall be provided as follows:

.1 lobby and intake areas shall be 1 m^2 per shelter bed, to a maximum of 20 m^2 to receive clients;

.2 **Front Setbacks** for new construction shall be 4.5 m and include an on-site exterior entrance area; and

.3 large windows or glazing to provide surveillance to support adequate sightlines into intake areas and onto the **Street**.

5.10.3 Designated on-site smoking areas and receptacles are required as follows:

.1 outdoor designated smoking areas shall comply with the Provincial regulations in regards to distance from doorways, air intakes and open windows;

.2 outdoor designated smoking area shall include weather protection and adequate ventilation; and

.3 outdoor amenity, storage, and designated smoking areas shall be well lit (but not intrusive to **Adjacent Lots**), including the use of motion detecting lighting, with natural surveillance.

5.11 Retail Cannabis Store

5.11.1 An application to authorize a new **Retail Cannabis Store** or relocate an existing authorized **Retail Cannabis Store** must not be approved unless the proposed location of the new **Retail Cannabis Store** is at least 500 m from any other authorized **Retail Cannabis Store**.

5.11.2 An application to authorize a new **Retail Cannabis Store** or relocate an existing authorized **Retail Cannabis Store** must not be approved unless the proposed location of the **Retail Cannabis Store** is at least 250 m from any institution, public or independent, that provides delivery of the Provincial education curriculum to minors including elementary, middle and secondary **Schools**.

5.11.3 If an application to authorize a new **Retail Cannabis Store** does not comply with Sections 5.11.1 and/or 5.11.2, the application may be approved if any of the following circumstances apply:

.1 the shortest travelling distance by road between the proposed location and the location of another authorized **Retail Cannabis Store** is greater than 500 m due to a physical

separation created by a **Watercourse**, body of water or other natural landscape feature; and

.2 the shortest travelling distance by road between the proposed location and the location of an institution identified in 5.11.2 is greater than 250 m due to a physical separation created by a **Watercourse**, body of water or other natural landscape feature.

5.11.4 If an application to authorize the relocation of an existing authorized **Retail Cannabis Store** does not comply with Sections 5.11.1 and/or 5.11.2, the application may be approved if any of the following circumstances apply:

.1 the proposed new location has the same permanent parcel identifier assigned under the *Land Title Act* as its current location;

.2 the proposed new location is not closer to another use identified in 5.11.1 and/or 5.11.2 than its current location;

.3 the shortest travelling distance by road between the proposed location and the location of another authorized **Retail Cannabis Store** is greater than 500 m due to a physical separation created by a **Watercourse**, body of water or other natural landscape; and

.4 the shortest travelling distance by road between the proposed location and the location of an institution identified in 5.11.2 is greater than 250 m due to physical separation created by a **Watercourse**, body of water or other natural landscape feature.

SECTION 6: Landscape & Screening

6.1 Required Landscaping

6.1.1 The minimum level of **Landscaping** required in each zone along all **Front**, **Rear** and **Side Yards** shall be determined from the Minimum Landscape Buffer Schedule (Table 6.1) and **Landscaping** details entitled Minimum Landscape Buffer in Section 6.6, unless otherwise specified as a **Landscape** corridor in the *Official Community Plan* (Plan Vernon) or any bylaw replacing same.

6.1.2 In cases where the **Lot** is to be developed in phases, **Landscaping** needs to be provided on all lands that are used for the development of a phase. This includes lands that have been graded or filled. **Landscaping** shall be required in subsequent phases on the remainder of the **Lot** at the time that these are developed.

6.1.3 Any designated **Landscaping** area between a **Lot Line** and an existing road curb or shoulder area shall be completed concurrently with **Landscaping** within **Lot Lines** by the development to the standard of **Landscaping** required for the **Lot** and in conformance with the *City of Vernon Subdivision & Development Servicing Bylaw No. 3843*.

6.2 Landscaping Standards

6.2.1 All required **Landscape** areas and installations shall meet or exceed the Landscape Standards Bylaw No. 5015, and meet or exceed the *Canadian Landscape Standard, current edition, as jointly published by the Canadian Society of Landscape Architects and the Canadian Nursery Landscape Association*.

6.2.2 All required **Landscape** areas and installations shall be regularly maintained by property **Owners** to meet the Landscape Maintenance Bylaw No. 5014, and meet or exceed the *Canadian Landscape Standard, current edition, as jointly published by the Canadian Society of Landscape Architects and the Canadian Nursery Landscape Association*.

6.2.3 In reference to 6.2.2 above, the **Landscape** maintenance requirements shall address and provide for the following items in regards to plant material: watering, mulching, pruning, fertilizing, liming and tree support, as well as weed, pest and disease control.

6.2.4 In reference to 6.2.2 above, the **Landscape** maintenance requirements shall address and provide for the following items in regards to lawns and grass areas: watering, fertilizing, liming, mowing and trimming, edging, aeration and repairs (regarding, reseeding or resodding), as well as weed, insect and disease control.

6.2.5 The execution of the above-mentioned **Landscape** maintenance requirements shall take place on a regular basis as to ensure a healthy, neat and orderly appearance throughout the year.

6.2.6 The above requirements for **Landscape** maintenance shall be enforced by the City, under Section 3 of this bylaw.

6.2.7 **Driveways** and walkways shall be located in order to accommodate the required **Landscape Buffers** of Section 6.7. Required **Landscape Buffers** shall be continuous along the affected **Lot** boundaries, interrupted only by walkways, **Driveways** and required utility service boxes.

6.2.8 All **Landscaped** areas will be graded to meet the following criteria:

.1 maximum 1:5 slope (20%) for lawn areas;

.2 maximum 1:3 slope (33%) for shrub or ground cover area;

.3 minimum 1:25 slope (4%) for cross slope for any **Landscape** area;

.4 all **Site** grading will direct overland drainage along or away from any **Landscape Buffer** to collection points off-site away from **Buildings**;

.5 all areas in which the existing slope exceeds 30% are to be identified; and

.6 all areas developed and **Adjacent** lands impacted by development with slopes greater than 30% shall be rehabilitated using indigenous vegetation common to the **Site**.

6.2.9 All outdoor storage areas shall have a dust-free surface.

6.2.10 All construction on-site must occur concurrently with erosion control measures to prevent the pollution, degradation, or siltation of natural areas and **Watercourses**. This includes the provision of temporary fencing prior to and during construction.

6.2.11 All required **Landscape Buffer** areas shall be watered by a fully automatic irrigation system. No run-off onto sidewalks, **Streets**, **Laneways**, **Alleys** or **Parking Areas** shall be permitted.

6.2.12 Notwithstanding Section 6.2.6, the following areas are exempt from having permanent fully automatic irrigation systems:

.1 existing areas of undisturbed native vegetation which have been accepted as **Landscape Buffer** or stream protection leave strips;

.2 **Landscape** areas specifically designed as xeriscape or drought resistant natural species plantings, however temporary irrigation may be required; and

.3 **Landscape Buffers** which are established with drought resistant species to return the area to a natural condition, however temporary irrigation may be required.

6.2.13 Where the retention of native trees and ground cover is required or permitted, a letter from a registered professional landscape architect or registered professional forester shall be submitted, indicating the mitigation measures required during and after the construction to ensure the health of the vegetation.

6.2.14 New trees and shrubs shall follow a consistent lateral placement and be set back a minimum of 1.0 m from all underground utilities.

6.3 Refuse and Recycling Bins

6.3.1 When any development is proposed, provisions for garbage storage, recycling and collection shall be provided on the same **Site** as the development, unless a bin sharing agreement is in place.

6.3.2 All **Site** refuse and recycling bins in zones other than agricultural zones, including all other large receptacles used for the **Temporary Storage** of materials, require opaque screening from **Adjacent Lots** and **Streets**.

6.3.3 All screening will be a minimum of 2.0 m in **Height** to a maximum **Height** that is equivalent to the **Height** of the refuse or recycling bin.

6.3.4 All sides open to public view shall be screened by the additional planting of shrub and groundcover material at least 1.5 m in **Height**.

6.3.5 Notwithstanding sub-section 6.3.2, a refuse or recycling bin located within a property and screened from adjoining **Lots** and **Streets** will not require any screening or **Landscape**.

6.3.6 All refuse or recycling bins shall be located entirely within the **Lot Lines** so as to not obstruct pedestrian or **Vehicle** traffic.

6.3.7 An unobstructed access **Laneway** or **Alley** with a minimum width of 3.0 m and a minimum vertical clearance of 4.6 m shall be provided for access to a required refuse and recycling room or enclosure.

6.3.8 All refuse and recycling bins should be sited as far away from **Watercourses** as possible.

6.4 Public Amenity Areas

6.4.1 **Public Amenity Areas**, when permitted pursuant to Section 6.6, must be solely for pedestrian **Use** and accessible to the public from both the **Street** and from the development.

6.4.2 The minimum **Public Amenity Area Street Frontage** is 6.0 m.

6.4.3 The minimum **Public Amenity Area** depth is 4.0 m.

6.4.4 For any **Public Amenity Area** in lieu of a **Landscape Buffer**, the following are minimum requirements:

.1 all **Hard Surface** areas shall use a decorative paving surface;

.2 a minimum of two benches for public seating shall be provided;

.3 a minimum of 3 trees, with a minimum 65 mm **Caliper** and rootball of 900 mm, shall be provided; and

.4 pedestrian and decorative lighting must be provided.

6.5 Fencing and Retaining Walls

6.5.1 Subject to traffic sight lines, the following **Height** limitations shall apply to fences, walls, chainlink fences and hedges in all housing zones:

.1 1.2 m (4.0 ft) if situated along the **Lot Lines** within a **Front Setback**;

.2 2.0 m (6.4 ft) if situated behind the **Front Setback**;

.3 2.0 m (6.4 ft) if situated abutting a **Side Yard**, **Flanking Side Yard** and/or **Rear Yard**.

6.5.2 Screen fences shall be consistent with the quality of **Building** design and materials of the **Principal Building**.

6.5.3 Screening fences required for outdoor storage areas for **Temporary Shelter Services** shall be a combination of opaque and translucent or lattice design to ensure nature surveillance is permitted into the space. Screen fences and walls shall complement **Building** design and materials.

6.5.4 Fencing type may be established in neighbourhood plans, building schemes or by precedent from **Adjacent Lots**.

6.5.5 Wood fences shall be designed to a high level of finish with materials of lumber grade standard or better. Wood posts shall be treated against rotting to provide for the longevity of the fence. Fences shall be constructed with all components of sufficient size, materials, and strength to prevent sagging and to minimize rot. Along sloping ground, the top of wood fences shall be horizontal with vertical drops at the posts.

6.5.6 Screening fences shall be opaque double-sided construction. Where screen fences are allowed or required by this bylaw, they shall be of an opaque or a combination of opaque, translucent or lattice design.

6.5.7 No fence constructed at the **Natural Grade** in housing zones, shall exceed 2.0 m in **Height**, except where abutting an agricultural or commercial zone the maximum **Height** is 2.4 m. No fence shall have pickets or finials extending above a horizontal rail that may pose a danger to wildlife.

6.5.8 No fence in a commercial or industrial zone shall exceed 2.4 m.

6.5.9 Industrial zones are to have an opaque 2.4 m high fence along all **Lot Lines** abutting non-industrial zones and around **Wrecking Yards** that are visible from a **Street** abutting the **Lot**.

6.5.10 No barbed wire or electrified fencing shall be allowed in any housing, commercial, community or industrial zones except:

.1 in ALR, AGRL and AGRS zones for use in livestock enclosures; and

.2 in CMTY zone where the **Site** is used for a **Detention Facility**.

Razor wire fences shall not be permitted in any zone.

6.5.11 Retaining walls on all housing-based **Lots**, except those required as a condition of subdivision approval, must not exceed a **Height** of 1.2 m measured from **Grade** on the lower side, and must be constructed so that multiple retaining walls are spaced to provide at least a 1.2 m horizontal separation between them.

6.5.12 In the case of a retaining wall constructed in accordance with Section 6.5.11, the combined **Height** of a fence on top of a retaining wall at the **Lot Line** or within 1.2 m of the **Lot Line** shall not exceed 2.0 m, measured from **Natural Grade** at the **Lot Line** (see Diagram 6.1).

6.5.13 Notwithstanding Section 6.5.11, a retaining wall may be higher than 1.2 m, measured from **Grade**, where the **Natural Grade** of the subject **Lot** is lower than the abutting **Lot** (see Diagram 6.2).

6.5.14 In the case of a retaining wall constructed in accordance with Section 6.5.13, the maximum **Height** of a fence, or portion of retaining wall extending above the **Natural Grade** of the abutting higher **Lot**, or combination thereof, shall be 2.0 m, measured from the **Natural Grade** of the abutting higher property (see Diagram 6.2).

6.5.15 Notwithstanding Section 6.5.14, where an affected property remains at **Natural Grade** and the subject **Lot** constructs a retaining wall and a fence within 1.2 m of the **Lot Line**, the maximum **Height** for a fence on the affected **Lot** shall be no greater than 1.8 m above the **Height** of the retaining wall or 2.0 m whichever is less (see Diagram 6.1).

Diagram 6.1 — Retaining Wall on Higher Subject Property

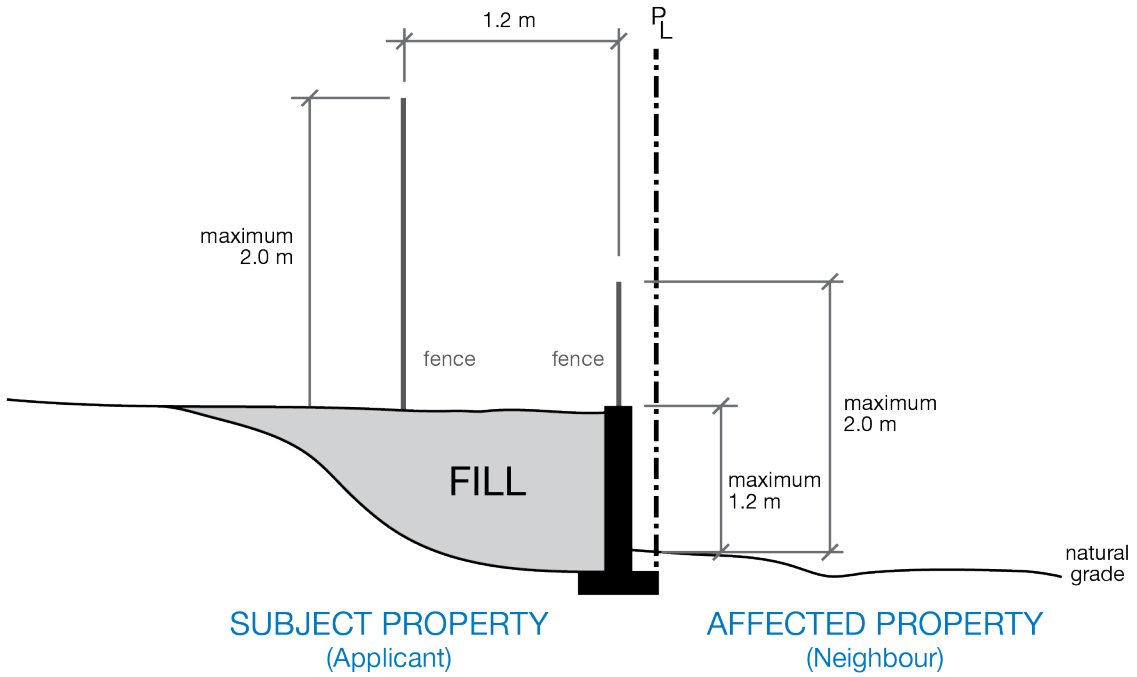

Diagram 6.2 — Retaining Wall on Lower Subject Property

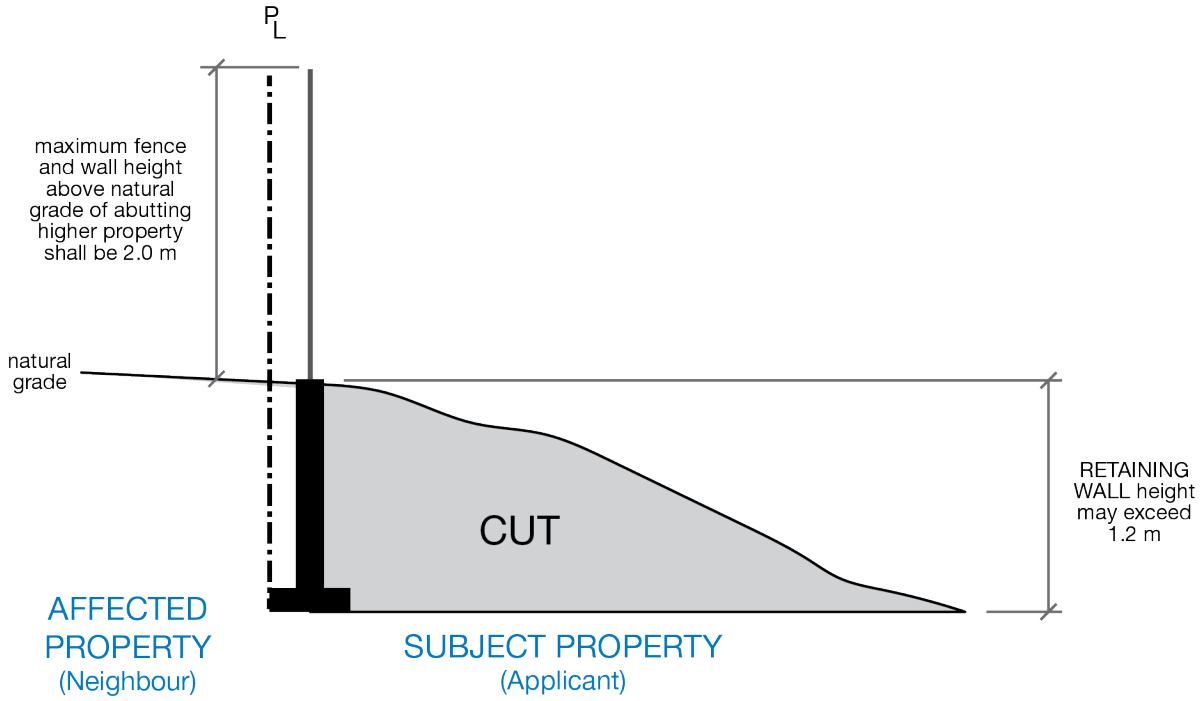

6.6 Minimum Landscape Buffers

6.6.1 **Landscape Buffers**, of a design as shown on the Minimum Landscape Buffer Treatment Drawings (Levels 1 through 5), for the **Front Yard**, **Side Yards**, and **Rear Yard** depending upon the zone as indicated by Section 6.6.5, are as follows:

.1 Level 0: no specific guidelines for the design of the **Landscape Buffer**;

.2 Level 1: a minimum 1.5 m **Landscape Buffer** is required and will consist of a vegetative buffer only, unless a fence is required for other reasons;

.3 Level 2: a minimum 1.5 m vegetative **Landscape Buffer** combined with a fence is required;

.4 Level 3: a minimum 2.0 m vegetative **Landscape Buffer** combined with a fence is required;

.5 Level 4: a minimum 3.0 m **Landscape Buffer** is required; and

.6 Level 5: a **Landscape Buffer** is required for all land abutting ALR land where non-farm **Uses** exist. The minimum buffer shall meet the guidelines in the Landscape Buffer Specifications document prepared by the Agricultural Land Commission.

6.6.2 Trees shall be spaced, on average, to the dimensions specified in the approved drawings. The equivalent of 1 tree per 10.0 lineal metre of required **Landscape Buffer**, including walkways, **Driveways** and required utility boxes, shall be planted on the subject property. Deciduous trees shall have a minimum **Caliper** of 60 mm with a minimum clearstem **Height** of 1.5 m. Conifers shall be a minimum of 2.5 m high. Irrigated No. 2 pot shrubs are to be placed at a maximum spacing of 1.0 m on center with 10 cm ground cover at a maximum spacing of 0.5 m on center. The equivalent of 1 shrub per 1 linear metre of required **Landscape Buffer**, including walkways, **Driveways**, and required utility boxes, shall be planted on the subject **Lot**. The shrubs shall be irrigated No. 2 pot shrubs and are to be placed at a maximum spacing of 1.0 m on centre.

6.6.3 In order to provide heritage trees for future generations, trees required according to Section 6.6.3 shall include legacy trees. One out of every ten trees required according to Section 6.6.3 shall be designated as a legacy tree and accordingly located and identified on approved drawings. A minimum of 1 legacy tree shall be provided.

6.6.4 Trees or shrubs higher than 0.6 m shall not be located in the visual triangle indicated on the drawings and specified by the *City of Vernon Traffic Bylaw No. 5600*.

6.6.5 Where a visual screen is required, it may consist of either vegetation or decorative fence or wall. The minimum **Height** of the screen is 1.2 m for Level 3 (at maturity for vegetation, planted at a minimum of 1.0 m high on an maximum spacing of 1.0 m on center), 1.5 m for Level 4, and 1.8 m for Level 5.

6.6.6 Notwithstanding Section 6.6.1, buffer widths may be reduced to the width of the actual **Setback** of the **Building** or **Structure** if the actual **Setback** of the **Building** or **Structure** is narrower than the buffer specified in Section 6.6.1.

6.6.7 Notwithstanding Section 6.6.1, parking lots abutting major roads as identified on Map 4 of *Official Community Plan*, require an additional **Landscape Buffer** of a minimum of 3.0 m.

6.6.8 Notwithstanding any other provisions in this bylaw, where leave strips are required along stream corridors in accordance with the *Official Community Plan*, the land and vegetation shall remain undisturbed. In the case of leave strips along Okanagan Lake, land is to remain in its natural condition or be **Landscaped** in a manner that either enhances conditions for fish and wildlife or maintains conditions equivalent to those that would have existed had no development occurred. Retaining walls along the Okanagan Lake waterfront are permitted under the terms of a development permit where required to protect lakefront property.

6.6.9 In addition to the minimum **Landscape Buffer** treatment levels above:

.1 all lands adjacent to provincial highways, except those in agricultural zones and within Town Centres, are required to have Level 4 **Landscape Buffer** treatment unless superceded by development permit area guidelines;

.2 all internal **Lot Lines** on a **Site** being comprehensively developed are exempt from **Side Yard** buffer zones;

.3 all industrial zone properties shall have a Level 3 buffer zone when **Adjacent** to non-industrial zone properties;

.4 all commercial zoned properties shall have a Level 3 buffer zone when **Adjacent** to non-commercial and non-industrial properties;

.5 CD zones shall specify Landscape Buffer treatment for the CD **Site**;

.6 all non-secondary surface parking **Lots** in a commercial zone shall have a Level 3 buffer zone;

.7 required **Landscape** islands in parking areas shall have the same level of **Landscaping** as a Level 1 buffer zone; and

.8 **Recreational Vehicle** parking compounds in housing zones shall have a Level 4 buffer zone.

6.6.10 Notwithstanding Section 6.6.1, all landscape areas should reflect the character and intent of the *Official Community Plan*.

6.6.11 Where a **Side Yard Landscape Buffer** treatment is required and an opaque barrier is included in the **Landscape Buffer** Treatment Design, the opaque barrier may be located at the **Lot Line**.

6.6.12 **Landscape Buffer** treatments for **School Sites** may be amended from the standards indicated in Table 6.1 - Minimum Landscape Buffer Schedule. Where changes to the standards are proposed,

supporting documentation from a registered **Landscape** architect must be provided that contains that the following objectives have been met:

.1 that sufficient screening to **Adjacent** housing-based **Lots** has been achieved;

.2 that adequate **Landscaping** has been provided to provide shade for **Buildings** and play areas;

.3 **Driveway** entrances and **Parking Areas** have been appropriately **Landscaped** for optimization of screening and vehicular **Site** lines; and

.4 **Landscaping** around active play areas ensures safety to children on the **School** grounds.

Where perimeter **Landscaping** cannot be provided due to any of the above noted objectives, the School District will be required to provide or upgrade boulevard trees on all abutting **Streets**.

Table 6.1— Minimum Landscape Buffer Schedule

Location	Front Yard	Rear Yard	Side Yard	Public Amenity Area Permitted
Agricultural Zones				
ALR, AGRL, AGRS	0	0	0	NO
Housing Zones				
MUS	0	0	0	NO
MUA, MHS	1	1	1	NO
MUM	1	2	1	NO
MSH	1	2	2	YES
Commercial and Resort Zones				
CMUN, CMUC	1	1	1	YES
CMUB	1	2	2	YES
RTH	1	1	1	NO
RCC	1	2	2	YES
Industrial Zones				
INDL, INDA	4	3	3	NO
Community & Parks Zones				
PANS	0	0	0	N/A
CMTY	1	1	1	YES
UTIL	3	1	1	NO

Minimum Landscape Buffer Treatment

Diagram 6.3
Level 1

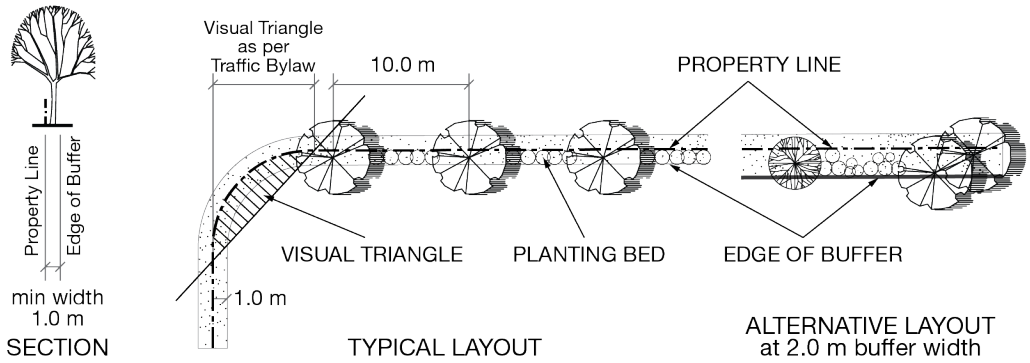

Diagram 6.4
Level 2

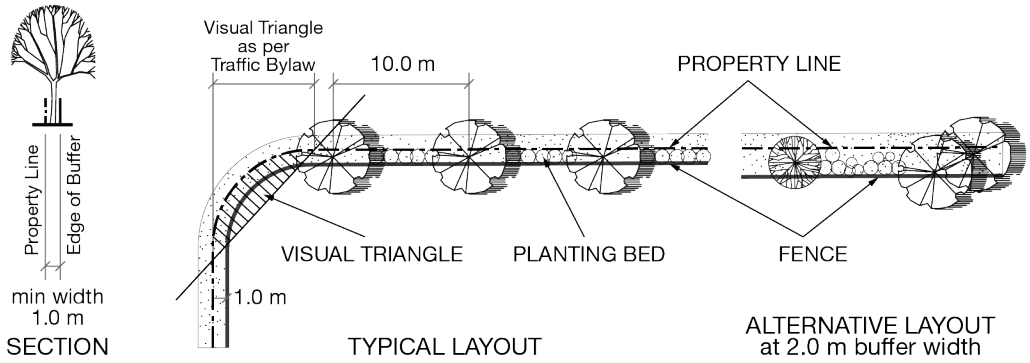

Diagram 6.5
Level 3

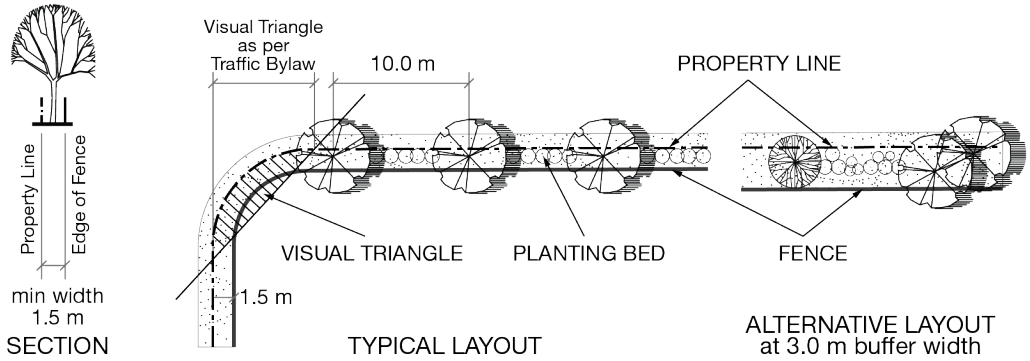

Diagram 6.6
Level 4

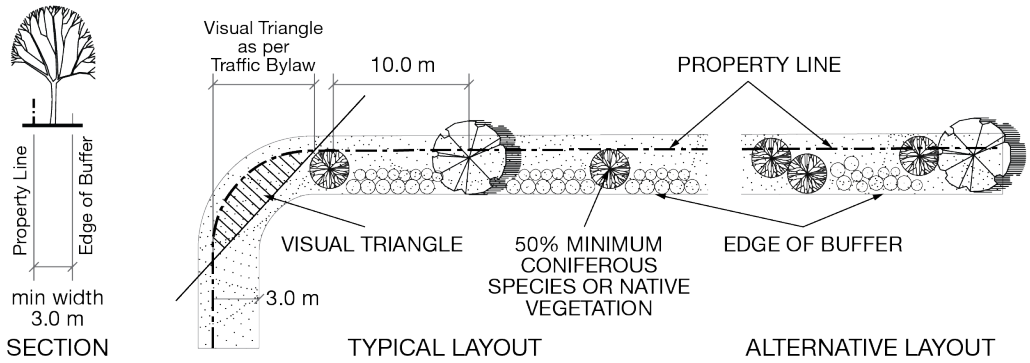

SECTION 7: Vehicle Parking, Loading, and Bike Parking

7.1 General Provisions

7.1.1 On-site **Vehicle** parking spaces, **Loading Spaces**, and **Bike Parking Spaces** must be provided in accordance with this section.

7.1.2 Where provision of on-site **Vehicle** parking spaces, **Loading Spaces**, or **Bike Parking Spaces** are required, a **Site** plan, **Landscaping** plan, and floor plan(s) of any **Garage**, **Parkade**, or indoor **Bike Parking Spaces** must be included with the development permit or building permit application.

The plan(s) must be drawn to scale, in metric, and clearly illustrate the size and configuration of the **Parking Areas**, **Vehicle** parking spaces, **Loading Spaces**, **Bike Parking Spaces**, **Drive Aisles**, **Driveways**, on-site circulation for **Commercial Vehicles** and emergency **Vehicles**, **Street**, **Laneway** or **Alley** accesses, **Landscaping**, fences, snow storage areas, and garbage, recycling, and organics storage areas.

7.1.3 Where a change of **Use** application does not result in a change to an existing **Building** footprint, addition of new **Building(s)** or **Structure(s)**, or other changes to the **Site** plan:

.1 the number of **Vehicle** parking and **Loading Spaces** in place for the existing **Use** will be considered legal non-conforming;

.2 the **Parking Area** must be **Hard Surfaced** and meet the development standards in Section 7.2; and

.3 **Bike Parking Spaces** must be provided.

7.1.4 Each **Use** of land or a **Building** or **Structure** is subject to a combination of all **Vehicle** parking space, **Loading Space**, and **Bike Parking Space** requirements, where **Vehicle** parking spaces include:

.1 regular **Vehicle** parking,

.2 small **Vehicle** parking,

.3 oversized **Vehicle** parking,

.4 accessible parking,

.5 visitor parking, and

.6 EV-ready parking.

Loading Spaces include:

.1 **Loading** for **Commercial Vehicles**, and

.2 **Pick-up/Drop-off Spaces**; and

Bike Parking Spaces include:

.1 **Short-Term Bike Parking**,

.2 **Long-Term Bike Parking**,

.3 **Inclusive Bike Parking**, and

.4 end-of-trip bike facilities.

7.1.5 **Vehicle** parking space, **Loading Space**, and **Bike Parking Space** requirements are independent and no space shall be considered to satisfy more than one requirement.

7.1.6 Where calculation of the total number of required spaces yields a fractional number, decimals of 0.5 and higher must be rounded up to the nearest whole number.

7.1.7 The total requirements of mixed **Uses** are the sum of the requirements for the **Net Floor Area** of each **Use**, unless a shared parking and loading study that considers all modes of transportation is completed and certified by a Professional Engineer and approved by the **Director of Planning & Community Services** determines that a lesser number of spaces is sufficient.

7.1.8 Where this Section 7.0 does not specify requirements for a particular **Use**, the **Director of Planning & Community Services** may determine the **Use** or combination of **Uses** for which requirements are specified that is most similar to the particular **Use**.

7.1.9 Where this Section 7 requires 100 or more **Vehicle** parking spaces on any **Lot** or **Site**, the applicant for a development permit or building permit must provide a parking study prepared and certified by a Professional Engineer and approved by the **Director of Planning & Community Services**. The requirements for **Vehicle** parking spaces and **Loading Spaces** shall be the lesser of the number required by this Section 7 and the number recommended by the Professional Engineer.

7.1.10 For non-profit housing developments, the requirements for **Vehicle** parking spaces and **Loading Spaces** shall be the lesser of the number required by this Section 7 and the number recommended in a parking study prepared and certified by a Professional Engineer and approved by the **Director of Planning & Community Services**.

7.2 Development Standards

7.2.1 Every on-site **Parking Area**, **Driveway**, and **Drive Aisle** must be **Hard Surfaced** and constructed such that surface drainage is directed to an approved drainage system or is contained on-site. Accessible parking space surfaces must be non-slip.

7.2.2 For either **Buildings** larger than 2000 m^2 **NFA** or with 7 or more **Dwelling Units**, a minimum of 25% of required **Vehicle** parking spaces for commercial and housing **Uses** must be entirely or partially enclosed in a **Parkade** or **Garage**. For **Buildings** and **Uses** in a **TOD Area** all **Vehicle** parking provided for commercial and housing **Uses** must be enclosed in a **Parkade** or **Garage**.

7.2.3 **Green Parking Lots** are required where a **Surface Parking Lot** contains 25 or more **Vehicle** parking spaces.

7.2.4 Every on-site **Parking Area** containing 3 or more **Vehicle** parking spaces must clearly delineate the **Vehicle** parking spaces, **Loading Spaces**, **Bike Parking Spaces**, **Drive Aisles**, entrances, exits, snow storage areas, and garbage, recycling, and organics storage areas using both pavement markings and signs.

7.2.5 Accessible parking spaces must have both a sign and pavement markings, and the side aisle or rear aisle for loading must be marked with yellow cross hatching. A side aisle may be shared between two accessible parking spaces.

7.2.6 Every on-site **Parking Area** must have fencing, curbs, or secured wheel stops to prevent **Vehicles** from encroaching upon **Lot Lines**, except where openings are needed for a **Barrier-free** path of travel, pedestrian walkway, or **Pathway**.

7.2.7 All on-site **Vehicle** parking spaces that abut a pedestrian walkway, **Pathway**, or **Landscaped** area must have secured wheel stops that are minimum 0.9 m from the walkway, **Pathway**, or **Landscaped** area and minimum 0.15 m in height.

Where the configuration is parallel parking, wheel stops are not required, but spaces **Adjacent** to a pedestrian walkway or **Pathway** must have an additional 0.3 m width to allow **Vehicle** doors to open without blocking the path of pedestrian travel.

Grades

7.2.8 **Parking Areas** and **Drive Aisles** may be constructed at **Grades** up to 8%. **Driveways** and ramps within a **Parkade** may be constructed at **Grades** up to 15%, except within 6.0 m of a **Front Lot Line**, where the **Grades** must comply with the *Subdivision and Development Servicing Bylaw*.

Parking Area Configuration

7.2.9 Every **Parking Area** containing 3 or more **Vehicle** parking spaces, other than in a **MUS – Multi-Unit: Small Scale** zone, must allow entry to and exit from the **Site** directly to a dedicated public **Street** or **Laneway** without reversing the vehicle.

Additionally:

.1 this access must not cross any **Lot** other than the **Lot** on which the **Parking Area** is located, unless a shared access easement is registered on all applicable titles; and

.2 a turning template drawn by a Professional Engineer or Architect may be required pursuant to Section 7.1.2 to demonstrate that **Commercial Vehicles** and emergency **Vehicles** can turnaround on-site.

7.2.10 **Drive Aisles** must be provided for on-site **Vehicle** maneuvering at the minimum widths specified in Table 7.1.

*Table 7.1 — Minimum **Drive Aisle** Widths by Purpose*

Purpose of Drive Aisle	Minimum Width
Two-way aisle **Adjacent** to 90-degree parking or angle parking	6.5 m
Two-way aisle **Adjacent** to parallel parking or no parking	6.0 m
One-way aisle **Adjacent** to 60-degree angle parking	4.5 m
One-way aisle **Adjacent** to 45-degree angle parking	3.5 m
One-way aisle **Adjacent** to parallel parking or no parking	3.0 m

7.2.11 No public **Street**, **Laneway**, or **Alley** may be used as the required **Drive Aisle** access to **Vehicle** parking spaces, except in a **MUS – Multi-Unit: Small Scale** zone. In a **TOD Area**, a **Laneway** may be used as the required **Drive Aisle**.

7.2.12 Where a **Laneway** or **Alley** is used as the **Drive Aisle**, either the **Vehicle** parking space length or the **Laneway** or **Alley** width must be increased by a minimum of 1.2 m.

7.2.13 No public **Street**, **Laneway**, or **Alley** may be used as a **Loading Space**, except a **Laneway** in a **MUS – Multi-Unit: Small Scale** zone or in a **TOD Area**.

7.2.14 **Tandem Parking** is only permitted for housing **Uses** when designated for an individual **Dwelling Unit**.

Location of Spaces

7.2.15 All required on-site **Vehicle** parking spaces, **Loading Spaces**, and **Bike Parking Spaces** must be located on the **Site** of the **Building**, **Structure**, or **Use** served by the spaces.

7.2.16 No on-site **Vehicle** parking spaces or **Loading Spaces** may be located in a required **Landscape Buffer** or a required sight triangle as defined by the *City of Vernon Traffic Bylaw*.

7.2.17 Accessible parking spaces, where required, must be located within 30.0 m of a **Building's** main entrance and must be provided with a **Barrier-free** path of travel between the accessible parking spaces and the entrance, which does not include stairs.

7.2.18 All **Short-term Bike Parking Spaces** must be located within 15 m of any main entrance, in a well-lit and visible area, that provides visual surveillance by occupants of the **Building**.

Snow Storage and Garbage, Recycling, and Organics Storage

7.2.19 All snow storage and garbage, recycling, and organics storage areas located within or **Adjacent** to any **Parking Area** must be located such that collection **Vehicles** can gain access without interfering with the function of the **Parking Area** or any abutting public **Street**, **Laneway** or **Alley**.

7.3 Vehicle Parking and Loading

Number of Spaces

7.3.1 The required minimum number of **Vehicle** parking spaces and **Loading Spaces** for each **Use** is specified in Table 7.7 — Parking, Loading, and Bike Parking Schedule.

7.3.2 The required maximum number of **Vehicle** parking spaces for each **Use** is specified in Table 7.7 — Parking, Loading, and Bike Parking Schedule, except that the **Uses** of **Accessory Parking**, **Outdoor Sales and Service**, **Outdoor Vending**, **Standalone Parking Facility**, **Vehicle Storage**, and **Special Events** are exempt.

7.3.3 The required maximum number of **Commercial Vehicle Loading Spaces** for housing **Uses** is 2.0 per **Building**.

7.3.4 **Loading Spaces** may be shared by multiple **Units** and must be calculated for the **Net Floor Area** of the entire **Site**.

7.3.5 **Buildings** and **Uses** located in a **TOD Area** or within 400 m from the centerline of road on a **Frequent Transit Route** are exempt from the required minimum number of **Vehicle** parking spaces for housing **Uses** and visitor parking spaces.

7.3.6 Accessible parking spaces must be provided in addition to the required minimum number of **Vehicle** parking spaces, as specified in Table 7.2.

Table 7.2 — Required Minimum Number of Accessible Parking Spaces

Required Minimum Number of Vehicle Parking Spaces	Required Minimum Number of Accessible Parking Spaces
0-4	0
5-25	1
26-50	2
51-75	3
76-100	4
101 or more	4 + 2% for every space over 100

7.3.7 Visitor parking spaces must be provided for all housing **Uses** and the **Use** of **Housing Care Centre** in addition to the required minimum number of **Vehicle** parking spaces, as specified in Table 7.3.

Table 7.3 — Required Minimum Number of Visitor Parking Spaces

Number of Dwelling Units	Required Minimum Number of Visitor Parking Spaces
0-4	0
5-10	1
11-15	2
16-20	3
21-25	4
26-30	5
31-40	6
41-50	7

Number of Dwelling Units	Required Minimum Number of Visitor Parking Spaces
51-60	8
61-70	9
71-80	10
81-90	11
91-100	12
101 or more	12 + 10% for every unit over 100

7.3.8 A portion of the required minimum **Vehicle** parking spaces must be provided as EV-ready spaces according to the **Use**, as specified in Table 7.4. EV-ready spaces are spaces that have direct access within 1.0 m to an energized 240-volt outlet that is capable of operating a Level-2 EV charger.

For the purposes of Table 7.4, **Secondary Suites** and **Accessory Dwelling Units** are exempt.

*Table 7.4 — Minimum Ratio of Required EV-ready **Vehicle** Parking Spaces*

Use	Minimum Ratio of EV-ready Vehicle Parking Spaces
Housing	1.0 per Dwelling Unit + 10% of visitor parking spaces
Commercial	15% of the minimum
Industrial	10% of the minimum
Community	10% of the minimum
Basic Services	10% of the minimum
Agricultural	n/a

Size of Spaces

7.3.9 The minimum dimensions required for each type of **Vehicle** parking space and **Loading Space** are specified in Table 7.5.

*Table 7.5 — Minimum Dimensions of **Vehicle** Parking Spaces and **Loading Spaces***

Type of Vehicle	Min. Length	Min. Width	Min. Overhead Clearance
Passenger Vehicles			
Regular	6.0 m	2.5 m	2.0 m
Small	4.8 m	2.3 m	2.0 m
Oversized	7.0 m	3.0 m	2.75 m
Accessible	6.0 m	2.7 m + 2.0 m side aisle	2.75 m
Commercial Vehicles	12.2 m	3.6 m	4.6 m

7.3.10 Up to 50% of **Vehicle** parking spaces may be small sized and up to 25% may be oversized.

7.3.11 **Pick-up/Drop-off Spaces** must be provided as regular sized or oversized **Vehicle** spaces.

7.3.12 For parallel parking, the minimum length of the parking spaces is increased by 1.0 m. An end space with an open end may be shortened by 0.5 m, and an accessible parallel space must have a 2.0 m long rear aisle for loading.

7.3.13 Where a **Vehicle** parking space is bordered on one or both sides by a wall, column, door, or other physical obstruction, the width of the space must be widened by the amount specified in Table 7.6.

Table 7.6 — Additional parking space width required for obstruction

Location of the Obstruction	Additional Width Required
One side	0.2 m
One side with a door opening into the **Vehicle** parking space	0.5 m
Both sides	0.5 m
Both sides with a door opening into the **Vehicle** parking space	0.8 m

7.4 Bike Parking

Number of Spaces

7.4.1 The required minimum number of **Short-term Bike Parking** and **Long-term Bike Parking Spaces** for each **Use** is specified in Table 7.7 — Parking, Loading, and Bike Parking Schedule.

7.4.2 A minimum of 50% of the required **Bike Parking Spaces** must be provided as **Inclusive Bike Parking**, including access to a 120-volt electrified outlet for charging e-bikes and e-scooters.

7.4.3 End-of-trip bike facilities are required in all **Buildings** that provide **Long-term Bike Parking**, which includes:

.1 1 locker, hook, cubby, or other storage area for every **Long-term Bike Parking Space** provided;

.2 1 electrified 120-volt outlet for every 5.0 **Long-term Bike Parking** space provided;

.3 1 shower and change room for every 15.0 **Long-term Bike Parking** space provided; and

.4 1 bike wash and repair area for every 15.0 **Long-term Bike Parking** space provided.

Size of Spaces

7.4.4 **Bike Parking Spaces** must be a minimum of 0.6 m wide, 1.8 m long, and have a vertical clearance of at least 1.9 m. **Inclusive Bike Parking** spaces must be a minimum of 1.0 m wide, 2.75 m long, and have a vertical clearance of at least 2.0 m.

7.4.5 Aisles between parked bikes must be a minimum of 1.2 m wide.

Development Standards

7.4.6 All **Bike Parking Spaces** must:

.1 be situated on a **Hard Surface**;

.2 be accessible by a ramp or elevator with sufficient space to maneuver with **Inclusive Bike Parking** sized bikes;

.3 include an automated door opener or kick-down door stop, where the **Bike Parking Space** location requires the bike to be maneuvered through a doorway;

.4 be constructed of theft-resistant material and securely and permanently anchored to the ground or wall with tamper-proof hardware;

.5 support two points of contact on the bike;

.6 be u-lock compatible; and

.7 be located clear of pedestrian paths of travel.

Table 7.7 — Parking, Loading, and Bike Parking Schedule

Use	Vehicle Parking Spaces		Minimum # Commercial Vehicle Loading Spaces	Minimum # Pick-up Drop-off Spaces	Minimum # Bike Parking Spaces	
	Minimum #	Maximum #			Short-Term	Long-Term
Housing						
Large Scale Multi-Unit Housing	0.8 per **Dwelling Unit**	2.0 per **Dwelling Unit**	1.0 per 2800 m^2 **NFA**	1.0 per 35 **Dwelling Units**	0.25 per **Dwelling Unit**	1.0 per **Dwelling Unit**
Medium Scale Multi-Unit Housing	1.0 per **Dwelling Unit**	2.0 per **Dwelling Unit**	1.0 per 2800 m^2 **NFA**	1.0 per 35 **Dwelling Units**	0.25 per **Dwelling Unit**	1.0 per **Dwelling Unit**
Mobile Home **Security** or **Operator Unit** **Small Scale Multi-unit Housing** **Small Scale Housing**	1.0 per **Dwelling Unit**	4.0 per **Dwelling Unit**	1.0 per 2800 m^2 **NFA**, where 11 or more **Dwelling Units**	1.0 per 35 **Dwelling Units**	0.25 per **Dwelling Unit**	1.0 per **Dwelling Unit**
Commercial						
All commercial **Uses** not listed below	1.5 per 100 m^2 **NFA**	2.5 per 100 m^2 **NFA**	1.0 per 2800 m^2 **NFA**, minimum 1 per **Site**	0.2 per 100 m^2 **NFA**	1.0 per 100 m^2 **NFA**	0.5 per 100 m^2 **NFA**
Animal Services	1.0 per 100 m^2 **NFA**	2.0 per 100 m^2 **NFA**	1.0 per 2800 m^2 **NFA**, minimum 1 per **Site**	0.2 per 100 m^2 **NFA**	0.5 per 100 m^2 **NFA**	0.25 per 100 m^2 **NFA**
Bar **Cannabis Lounge** **Drive-through Services** **Food & Beverage Service**	4.0 per 100 m^2 **NFA**	9.0 per 100 m^2 **NFA**	1.0 per 2800 m^2 **NFA**, minimum 1 per **Site**	0.2 per 100 m^2 **NFA**	1.0 per 100 m^2 **NFA**	0.5 per 100 m^2 NFA
Campsite	1.0 per camping space	2.0 per camping space	n/a	1.0 per 35 camping spaces	1.0 per 5 camping spaces	1.0 per 2 camping spaces
Health Service	2.0 per 100 m^2 **NFA**	4.0 per 100 m^2 **NFA**	1.0 per 2800 m^2 **NFA**, minimum 1 per **Site**	0.2 per 100 m^2 **NFA**	1.0 per 100 m^2 **NFA**	0.5 per 100 m^2 **NFA**
Hotel	0.75 per **Sleeping Unit**	1.5 **per Sleeping Unit**	1.0 per 2800 m^2 **NFA**, minimum 1 per **Site**	1.0 per 20 **Sleeping Units**	1.0 per 5 **Sleeping Units**	1.0 per 2 **Sleeping Units**
Light Manufacturing	1.0 per 100 m^2 **NFA**	2.5 per 100 m^2 **NFA**	1.0 per 1900 m^2 **NFA**, minimum 1 per **Site**	0.2 per 100 m^2 **NFA**	1.0 per 100 m^2 **NFA**	0.5 per 100 m^2 **NFA**
Marina	1.0 per 10 boats and	n/a	1.0 per boat launch	n/a	1.0 per 10 boats and	n/a

Use	Vehicle Parking Spaces		Minimum # Commercial Vehicle Loading Spaces	Minimum # Pick-up Drop-off Spaces	Minimum # Bike Parking Spaces	
	Minimum #	Maximum #			Short-Term	Long-Term
	10.0 per boat launch				10.0 per boat launch	
Major Indoor Entertainment	1.5 per 100 m^2 **NFA** or 1 per 5 seats	3.0 per 100 m^2 **NFA**	1.0 per 2800 m^2 **NFA**, minimum 1 per **Site**	0.2 per 100 m^2 **NFA**	1.0 per 100 m^2 **NFA**	0.5 per 100 m^2 **NFA**
Outdoor Entertainment	4.0 per hectare	30.0 per hectare	1.0 per **Site**	1.0 per public entrance	2.0 per hectare	4.0 per **Site**
Resort Accommodation	1.0 per **Dwelling Unit**	4.0 per **Dwelling Unit**	1.0 per 2800 m^2 **NFA**, where 11 or more **Dwelling Units**	1.0 per 35 **Dwelling Units**	0.25 per **Dwelling Unit**	1.0 per **Dwelling Unit**
Industrial						
All industrial **Uses** not listed below	1.0 per 100 m^2 **NFA**	2.5 per 100 m^2 **NFA**	1.0 per 1900 m^2 **NFA**, minimum 1 per **Site**	0.1 per 100 m^2 **NFA**	0.5 per 100 m^2 **NFA**	0.25 per 100 m^2 **NFA**
Airport Terminal and **Navigation Facilities**	2.0 per 100 m^2 **NFA**	4.0 per 100 m^2 **NFA**	1.0 per 1900 m^2 **NFA**, minimum 1 per **Site**	0.1 per 100 m^2 **NFA**	0.5 per 100 m^2 **NFA**	0.25 per 100 m^2 **NFA**
Indoor Self Storage Warehouses	0.5 per 100 m^2 **NFA**	1.5 per 100 m^2 **NFA**	1.0 per 1900 m^2 **NFA**, minimum 1 per **Site**	0.1 per 100 m^2 **NFA**	0.5 per 100 m^2 **NFA**	0.25 per 100 m^2 **NFA**
Community						
All community **Uses** not listed below	1.5 per 100 m^2 **NFA**	2.5 per 100 m^2 **NFA**	1.0 per 2800 m^2 **NFA**, minimum 1 per **Site**	0.2 per 100 m^2 **NFA**	1.0 per 100 m^2 **NFA**	0.5 per 100 m^2 **NFA**
Housing Care Centre	0.25 per **Sleeping Unit**	1.0 per **Sleeping Unit**	1.0 per 2800 m^2 **NFA**, minimum 1 per **Site**	1.0 per 35 **Sleeping Units**	1.0 per 5 **Sleeping Units**	1.0 per 2 **Sleeping Units**
Outdoor Recreation Facility	4.0 per hectare	30.0 per hectare	n/a	n/a	2.0 per hectare	n/a
Park	4.0 per hectare	30.0 per hectare	n/a	n/a	2.0 per hectare	n/a
School	3.5 per elementary or middle school	8.0 per elementary classroom or	1.0 per 2800 m^2 **NFA**, minimum 1 per **Site**	5.0 per elementary, middle, or high	0.5 per 100 m^2 **NFA**	3.5 per elementary or middle school

Use	Vehicle Parking Spaces		Minimum # Commercial Vehicle Loading Spaces	Minimum # Pick-up Drop-off Spaces	Minimum # Bike Parking Spaces	
	Minimum #	Maximum #			Short-Term	Long-Term
	classroom or 7.0 per high school classroom or 1 per 6 post-secondary seats	10.0 per high school classroom or 1 per 4 post-secondary seats		school public entrance or 0.2 per 100 m^2 **NFA** post-secondary		classroom or 7.0 per high school classroom or 1 per 6 post-secondary seats
Supportive Housing	0.5 per **Sleeping Unit**	1.0 per **Sleeping Unit**	1.0 per 2800 m^2 **NFA**, where 11 or more **Sleeping Units**	1.0 per 35 **Sleeping Units**	1.0 per 5 **Sleeping Units**	1.0 per 2 **Sleeping Units**
Basic Services						
All basic services **Uses** not listed below	1.0 per 100 m^2 **NFA**	2.0 per 100 m^2 **NFA**	1.0 per 1900 m^2 **NFA**, minimum 1 per **Site**	0.1 per 100 m^2 **NFA**	0.5 per 100 m^2 **NFA**	0.25 per 100 m^2 **NFA**
Health Care Facility	2.0 per 100 m^2 **NFA**	4.0 per 100 m^2 **NFA**	1.0 per 2800 m^2 **NFA**, minimum 1 per **Site**	0.2 per 100 m^2 **NFA**	1.0 per 100 m^2 **NFA**	0.5 per 100 m^2 **NFA**
Agricultural						
All agricultural **Uses** not listed below	n/a	n/a	n/a	n/a	n/a	n/a
Additional Agricultural Dwelling	1.0 per **Dwelling Unit**	4.0 per **Dwelling Unit**	n/a	n/a	n/a	1.0 per **Dwelling Unit**
Agricultural Stand	n/a	n/a	n/a	1.0 per **Site**	n/a	n/a
Agri-Tourism Accommodation	0.75 per **Sleeping Unit**	1.5 per **Sleeping Unit**	1.0 per 2800 m^2 **NFA**, minimum 1 per **Site**	1.0 per **Site**	1.0 per 5 **Sleeping Units**	1.0 per 2 **Sleeping Units**

SECTION 8: Agricultural & Rural

8.1 ALR – Agricultural Land Reserve (ALR)

8.1.1 Purpose

To preserve and promote agricultural practices in accordance with the *Agricultural Land Commission Act* and all other relevant legislation. The ALR zone is designed to encourage and facilitate the continuation and growth of agriculture in Vernon while protecting the City's valuable agricultural resources for future generations. Matters not regulated in this zone may be subject to the *Agricultural Land Commission Act*, *Agricultural Land Reserve Use Regulation*, *Agricultural Land Reserve General Regulation*, and orders of the Agricultural Land Commission.

8.1.2 Permitted Uses

No regulations

8.1.3 Density of Housing Use

The number and type of **Dwelling Units** on a **Lot** with an area indicated in the left-hand column of the following table must not exceed the number indicated in the right-hand column of the table.

Lot Area	Community Sewer System	Maximum Density
> 1 ha (2.47 ac)	No	No regulations
< 1 ha (2.47 ac)	No	1 **Dwelling Unit**, plus 1 **Secondary Suite**
Any **Lot Area**	Yes	No regulations

8.1.4 Subdivision Lot Area and Dimensions

Minimum **Lot Width**: 40 m
Minimum **Lot Area**: 12 ha (29.65 ac)

8.1.5 Size and Siting of Buildings

Uses, **Buildings** and **Structures** must be sited at least the distance indicated in the following table from an abutting **Street**, **Lot, Laneway** or **Alley**, according to the character of the **Building** or **Structure** described in the left-hand column of the table, and **Buildings** and **Structures** must not exceed the **Height** indicated in the right-hand column of the table.

Uses, Buildings & Structures	**Minimum Setback Abutting a:**			**Max. Height**
	Street	**Lot**	**Laneway or Alley**	
Dwelling Units & seasonal accommodation for farm workers	6.0 m	3.0 m	6.0 m	11.0 m
Accessory Buildings & Structures	6.0 m	3.0 m	3.0 m	8.0 m
Accessory Dwelling Units	6.0 m	3.0 m	3.0 m	8.0 m
Agri-tourism Accommodation	6.0 m	10.0 m	6.0 m	8.0 m
Agricultural Buildings & Structures	6.0 m	3.0 m	3.0 m	16.0 m
Confined livestock areas & Buildings or Structures housing animals	15.0 m Abutting a housing zone: 30.0 m	15.0 m Abutting a housing zone: 30.0 m	15.0 m Abutting a housing zone: 30.0 m	16.0 m
Kennels and stables	15.0 m	15.0 m	15.0 m	16.0 m

8.1.6 Development Regulations

.1 Kennels and stables are not permitted on **Lots** with areas of less than 2.0 ha.

.2 **Buildings** and **Structures** for housing **Use** must conform with ALC regulations.

.3 The maximum number of **Agri-tourism** accommodation **Sleeping Units** per farm is:

	Lot Area (ha)			
	< 2.0	**2.0 – 3.5**	**3.6 – 4.9**	**> 5.0**
Sleeping Units	0	5	7	10

For clarity, the total number of **Agri-tourism** accommodation **Sleeping Units** permitted includes any number of **Sleeping Units** used for **Short-term Rental Accommodation**.

.4 Maximum **Site Coverage**:

Use	**Maximum Site Coverage**
Housing Uses including Accessory Buildings & Structures	10%
Agricultural Buildings & Structures	35%
Agri-tourism Accommodation	No regulations
Greenhouses and nurseries with closed wastewater & stormwater management systems	75%

8.2 AGRL – Agriculture & Rural: Large Block (Non-ALR)

8.2.1 Purpose

To allow for agricultural and rural **Uses** on large parcels of land in a rural setting outside of ALR boundaries where high natural amenity exists and urban services are limited.

8.2.2 Permitted Uses

Uses permitted as **Principal** or **Accessory Uses** in this zone are indicated with the symbol ● in the following table and **Uses** not listed are prohibited.

Use	Principal	Accessory
Housing		
Small Scale Housing	●	
Commercial		
Animal Services	●	
Light Manufacturing		●
Home Based Business		●
Short-term Rental Accommodation		●
Temporary Storage		●
Community		
Housing Care Centre	●	
Special Event		●
Supportive Housing	●	
Basic Services		
Emergency Services	●	
Essential Utility		●
Minor Utility Services		●
Agricultural		
Additional Agricultural Dwelling		●
Agriculture	●	
Agricultural Stand		●

8.2.3 Density of Housing Use

Maximum **Density**: 1 **Dwelling Unit**, plus 1 **Secondary Suite**, plus 1 **Accessory Dwelling Unit**

8.2.4 Subdivision Lot Area and Dimensions

Minimum **Lot Width**: 100 m
Minimum **Lot Area**: 12 ha (29.65 ac)

8.2.5 Siting and Size of Buildings

Uses, **Buildings** and **Structures** must be sited at least the distance indicated in the following table from an abutting **Street**, **Lot**, **Laneway** or **Alley**, according to the character of the **Building** or **Structure** described in the left-hand column of the table, and **Buildings** and **Structures** must not exceed the **Height** indicated in the right-hand column of the table.

Uses, Buildings & Structures	**Minimum Setback Abutting a:**			**Max. Height**
	Street	**Lot**	**Laneway or Alley**	
Dwelling Units & seasonal accommodation for farm workers	6.0 m	3.0 m	6.0 m	11.0 m
Accessory Buildings & Structures	6.0 m	3.0 m	3.0 m	8.0 m
Accessory Dwelling Unit	6.0 m	3.0 m	3.0 m	8.0 m
Agricultural Buildings & Structures	6.0 m	3.0 m	3.0 m	16.0 m
Confined livestock areas & Buildings or Structures housing animals	15.0 m Abutting a housing zone: 30.0 m	15.0 m Abutting a housing zone: 30.0 m	15.0 m Abutting a housing zone: 30.0 m	16.0 m
Kennels and stables (Min. Lot Area 2.0 ha)	15.0 m	15.0 m	15.0 m	16.0 m

8.2.6 Development Regulations

.1 Kennels and stables are not permitted on **Lots** with areas of less than 2.0 ha.

.2 Maximum **Site Coverage**:

Use	**Maximum Site Coverage**
Housing Uses including Accessory Buildings & Structures	10%
Agricultural Buildings & Structures	35%
Greenhouses and nurseries with closed wastewater & stormwater management systems	75%

8.3 AGRS – Agriculture & Rural: Small Block (Non-ALR)

8.3.1 Purpose

To allow for agricultural and rural **Uses** on smaller parcels of land in a rural setting outside of ALR boundaries where high natural amenity exist and urban services are limited.

8.3.2 Permitted Uses

Uses permitted as **Principal** or **Accessory Uses** in this zone are indicated with the symbol ● in the following table and **Uses** not listed are prohibited.

Use	Principal	Accessory
Housing		
Small Scale Housing	●	
Commercial		
Animal Services	●	
Campsite		●
Light Manufacturing		●
Home Based Business		●
Outdoor Entertainment		●
Short-term Rental Accommodation		●
Temporary Storage		●
Community		
Child Care Services	●	
Housing Care Centre	●	
Special Event		●
Supportive Housing	●	
Basic Services		
Emergency Services	●	
Essential Utility		●
Minor Utility Services		●
Agricultural		
Additional Agricultural Dwelling		●
Agriculture	●	
Agricultural Stand		●

8.3.3 Density of Housing Use

The number and type of **Dwelling Units** on a **Lot** with an area indicated in the left-hand column of the following table must not exceed the number indicated in the right-hand column of the table.

Lot Area	**Community Sewer System**	**Maximum Density**
> 1 ha (2.47 ac)	No	1 **Dwelling Unit**, plus 1 **Secondary Suite**, plus 1 **Accessory Dwelling Unit**
< 1 ha (2.47 ac)	No	1 **Dwelling Unit**, plus 1 **Secondary Suite**
Any Lot Area	Yes	1 **Dwelling Unit**, plus 1 **Secondary Suite**, plus 1 **Accessory Dwelling Unit**

8.3.4 Subdivision Lot Area and Dimensions

Minimum **Lot Width**: 40 m
Minimum **Lot Area**: 2 ha (4.94 ac)

8.3.5 Siting and Size of Buildings

Uses, **Buildings** and **Structures** must be sited at least the distance indicated in the following table from an abutting **Street**, **Lot**, **Laneway** or **Alley**, according to the character of the **Building** or **Structure** described in the left-hand column of the table, and **Buildings** and **Structures** must not exceed the **Height** indicated in the right-hand column of the table.

Uses, Buildings & Structures	**Minimum Setback Abutting a:**			**Max. Height**
	Street	**Lot**	**Laneway or Alley**	
Dwelling Units & seasonal accommodation for farm workers	6.0 m	3.0 m	6.0 m	11.0 m
Accessory Buildings & Structures	6.0 m	3.0 m	3.0 m	8.0 m
Accessory Dwelling Unit	6.0 m	3.0 m	3.0 m	8.0 m
Agricultural Buildings & Structures	6.0 m	3.0 m	3.0 m	16.0 m
Confined livestock areas & Buildings or Structures housing animals	15.0 m Abutting a housing zone: 30.0 m	15.0 m Abutting a housing zone: 30.0 m	15.0 m Abutting a housing zone: 30.0 m	16.0 m
Kennels and stables	15.0 m	15.0 m	15.0 m	16.0 m

8.3.6 Development Regulations

.1 Kennels and stables are not permitted on **Lots** with areas of less than 2.0 ha.

.2 Maximum **Site Coverage**:

Use	**Maximum Site Coverage**
Housing Uses including Accessory Buildings & Structures	10%
Agricultural Buildings & Structures	35%
Greenhouses and nurseries with closed wastewater & stormwater management systems	75%

SECTION 9: Housing

9.1 MUS – Multi-Unit: Small Scale

9.1.1 Purpose

To allow for a range of small-scale housing development up to 3 **Storeys** in **Height**, including detached, attached, and multi-unit housing on **Lots** under 4,050 m^2 (1 ac). This zone has **Site** and **Building** regulations that provide additional development flexibility in appropriate contexts, based on **Site** servicing and **Lot Area**.

9.1.2 Permitted Uses

Uses permitted as **Principal** or **Accessory Uses** in this zone are indicated with the symbol ● in the following table and **Uses** not listed are prohibited.

Use	Principal	Accessory
Housing		
Small Scale Housing	●	
Small Scale Multi-unit Housing	●	
Commercial		
Home Based Business		●
Short-term Rental Accommodation		●
Community		
Housing Care Centre	●	
Supportive Housing	●	
Agricultural		
Urban Agriculture		●

9.1.3 Density of Housing Use

The number and type of **Dwelling Units** on a **Lot** with characteristics indicated in the second, third, fourth and fifth columns of the following table must not exceed the number indicated in the right-hand column of the table.

Class	Community System		Inside the Urban Containment Boundary	Lot Area	Maximum Density
	Water	Sewer			
1	N/A	No	N/A	Any **Lot Area**	1 **Dwelling Unit**, plus 1 **Secondary Suite**
2	N/A	Yes	N/A	Any **Lot Area**	1 **Dwelling Unit**, plus 1 **Secondary Suite**, plus 1 **Accessory Dwelling Unit**
3	Yes	Yes	Yes	Up to 280 m^2	3 **Dwelling Units**
4	Yes	Yes	Yes	280 m^2 to 4,050 m^2	The greater of: a) 4 **Dwelling Units**; or b) 60 **Dwelling Units** / ha (24 **Dwelling Units** / ac)
5 **(within 400 m of a frequent Transit Route)**	Yes	Yes	Yes	280 m^2 to 4,050 m^2	The greater of: a) 6 **Dwelling Units**; or b) 60 **Dwelling Units** / ha (24 **Dwelling Units** / ac)

9.1.4 Subdivision Lot Area and Dimensions

Community Sewer System	Lot Area		Minimum Lot Width
	Minimum	Maximum	
Not Connected	Subdivision not permitted		
Connected	500 m^2 (0.125 ac)	4,050 m^2 (1 ac)	**Interior Lot**: 14 m **Exterior Lot**: 20 m

9.1.5 Siting of Buildings

Buildings and **Structures** must be sited at least the distance indicated in the following table from an abutting **Street**, **Lot**, **Laneway** or **Alley**, according to the character of the **Building** or **Structure** described in the right-hand column of the table.

Class 1

Lot Line Abutting a:	**Minimum Setback**		
	Dwelling Unit(s)	**Accessory Building(s)**	**Garage or carport**
Street	6.0 m	6.0 m	6.0 m
Laneway or Alley	6.0 m	1.5 m	N/A
Housing-based Lot	3.0 m	1.5 m	N/A
Non-housing-based Lot	3.0 m	1.5 m	N/A
Party Wall	0.0 m	0.0 m	N/A

Class 2

Lot Line Abutting a:	**Minimum Setback**		
	Dwelling Unit(s)	**Accessory Building(s)**	**Garage or carport**
Street	5.0 m	5.0 m	6.0 m
Laneway or Alley	1.5 m	1.5 m	N/A
Housing-based Lot	1.5 m	1.5 m	N/A
Non-housing-based Lot	3.0 m	1.5 m	N/A
Party Wall	0.0 m	0.0 m	N/A

Class 3

Lot Line Abutting a:	**Minimum Setback**		
	Dwelling Unit(s)	**Accessory Building(s)**	**Garage or carport**
Street	4.0 m	4.0 m	6.0 m
Laneway or Alley	1.5 m	1.5 m	N/A
Housing-based Lot	1.5 m	1.5 m	N/A
Non-housing-based Lot	3.0 m	1.5 m	N/A
Party Wall	0.0 m	0.0 m	N/A

Class 4

Lot Line Abutting a:	Minimum Setback		
	Dwelling Unit(s)	Accessory Building(s)	Garage or carport
Street	4.0 m	4.0 m	6.0 m
Laneway or Alley	1.5 m	1.5 m	N/A
Housing-based Lot	1.5 m	1.5 m	N/A
Non-housing-based Lot	3.0 m	1.5 m	N/A
Party Wall	0.0 m	0.0 m	N/A

Class 5

Lot Line Abutting a:	Minimum Setback		
	Dwelling Unit(s)	Accessory Building(s)	Garage or carport
Street	4.0 m	4.0 m	6.0 m
Laneway or Alley	1.5 m	1.5 m	N/A
Housing-based Lot	1.5 m	1.5 m	N/A
Non-housing-based Lot	3.0 m	1.5 m	N/A
Party Wall	0.0 m	0.0 m	N/A

9.1.6 Size of Buildings

Buildings and **Structures** of the type indicated in the left-hand column of the following table must not exceed the **Height** indicated in the right-hand column of the table.

Type	Maximum Height
Dwelling Unit(s)	11 m (3 Storeys)
Accessory Dwelling Unit(s)	8 m (2 Storeys)
Accessory Building(s)	4.5 m

9.1.7 Development Regulations

.1 **Lots** in the classes indicated in the left-hand column of the following table must be provided with **Landscaping** to at least the extent indicated in the right-hand column of the table, and **Lot** classes shall be determined in accordance with the table in Section 9.1.3.

Class	Minimum Landscaping Area
1	50%
2	40%
3	25%
4	30%
5	25%

.2 Maximum total length of any **Building Frontage** for new construction, and of additions including the length of an existing **Building Frontage**, is 30 m.

.3 Where a proposed **Building** is located on a **Lot** abutting a **Laneway** or **Alley**, **Vehicle** access to the **Parking Area** serving the **Building** is only permitted from the **Laneway** or **Alley**.

.4 Common **Buildings**, facilities and amenities in strata plans shall be treated as **Accessory Buildings** for the purposes of determining their permitted **Height** and siting.

9.2 MUA – Multi-Unit Acreage: Small Scale

9.2.1 Purpose

To allow for a range of small-scale low-density housing development up to 3 **Storeys** in **Height**, including detached, attached, and multi-unit housing-based **Buildings** on **Lots** greater than 4,050 m^2 (1 ac) in **Lot Area**. This zone has **Site** and **Building** regulations that provide additional development flexibility in appropriate contexts, based on **Site** servicing and **Lot Area**.

9.2.2 Permitted Uses

Uses permitted as **Principal** or **Accessory Uses** in this zone are indicated with the symbol ● in the following table and **Uses** not listed are prohibited.

Use	Principal	Accessory
Housing		
Small Scale Housing	●	
Small Scale Multi-unit Housing	●	
Commercial		
Home Based Business		●
Short-term Rental Accommodation		●
Community		
Housing Care Centre	●	
Supportive Housing	●	
Agricultural		
Urban Agriculture		●

9.2.3 Density of Housing Use

The number and type of **Dwelling Units** on a **Lot** with characteristics indicated in the second, third, fourth and fifth columns of the following table must not exceed the number indicated in the right-hand column of the table.

Class	Community System		Inside the Urban Containment Boundary	Lot Area	Maximum Density
	Water	Sewer			
1	N/A	No	N/A	4,050 m^2 (1 ac) to 10,000 m^2 (2.47 ac)	1 **Dwelling Unit**, plus 1 **Secondary Suite**
2	N/A	No	N/A	> 10,000 m^2 (2.47 ac)	1 **Dwelling Unit**, plus 1 **Secondary Suite**, plus 1 **Accessory Dwelling Unit**
3	N/A	Yes	N/A	Any **Lot Area**	1 **Dwelling Unit**, plus 1 **Secondary Suite**, plus 1 **Accessory Dwelling Unit**
4	Yes	Yes	Yes	Any **Lot Area**	60 **Dwelling Units** / ha (24 **Dwelling Units** / ac)

9.2.4 Subdivision Lot Area and Dimensions

Community Sewer System	Minimum Lot Area	Minimum Lot Width
Not Connected	10,000 m^2 (2.47 ac)	**Interior Lot**: 28 m **Exterior Lot**: 34 m
Connected	4,050 m^2 (1 ac)	**Interior Lot**: 28 m **Exterior Lot**: 34 m

9.2.5 Siting of Buildings

Buildings and **Structures** must be sited at least the distance indicated in the following table from an abutting **Street**, **Lot**, **Laneway** or **Alley**, according to the character of the **Building** or **Structure** described in the right-hand column of the table.

Lot Line Abutting a:	Minimum Setback		
	Dwelling Unit(s)	Accessory Building(s)	Garage or carport
Street	4.0 m	4.0 m	6.0 m
Laneway or **Alley**	1.5 m	1.5 m	N/A
Housing-based Lot	1.5 m	1.5 m	N/A
Non-housing-based Lot	3.0 m	1.5 m	N/A
Party Wall	0.0 m	0.0 m	N/A

9.2.6 Size of Buildings

Buildings and **Structures** of the type indicated in the left-hand column of the following table must not exceed the **Height** indicated in the right-hand column of the table.

Type	Maximum **Height**
Dwelling Unit(s)	11 m (3 **Storeys**)
Accessory Dwelling Unit(s)	8 m (2 **Storeys**)
Accessory Building(s)	4.5 m

9.2.7 Development Regulations

.1 **Lots** in the classes indicated in the left-hand column of the following table must be provided with **Landscaping** to at least the extent indicated in the second column and **Dwelling Units** must be provided with **Amenity Areas** of at least the extent indicated in the right-hand column, and **Lot** classes shall be determined in accordance with the table in Section 9.2.3.

Class	Minimum **Landscaping Area**	Minimum **Common & Private Amenity Area(s)**
1	60%	5 m^2 / bachelor **Dwelling Unit** 10 m^2 / 1 bedroom **Dwelling Unit** 15 m^2 / **Dwelling Unit** with more than 1 bedroom
2	50%	
3	50%	
4	30%	

.2 Maximum total length of any **Building Frontage** for new construction, and of additions including the length of an existing **Building Frontage**, is 30 m.

.3 Where a proposed **Building** is located on a **Lot** abutting a **Laneway** or **Alley**, **Vehicle** access to the **Parking Area** serving the **Building** is only permitted from the **Laneway** or **Alley**.

.4 Common **Buildings**, facilities and amenities in strata plans shall be treated as **Accessory Buildings** for the purposes of determining their permitted **Height** and siting.

9.3 MHS – Mobile Home Site

9.3.1 Purpose

A zone to accommodate **Mobile Homes** on individual **Mobile Home Sites** including within a **Mobile Home Park** setting.

9.3.2 Permitted Uses

Uses permitted as **Principal** or **Accessory Uses** in this zone are indicated with the symbol ● in the following table and **Uses** not listed are prohibited.

Use	Principal	Accessory
Housing		
Mobile Home	●	
Commercial		
Home Based Business		●
Office		●
Short-term Rental Accommodation		●
Community		
Housing Care Centre	●	
Supportive Housing	●	
Agricultural		
Urban Agriculture		●

9.3.3 Density of Housing Use

Maximum **Density** is 20 **Mobile Homes** / ha (8 **Mobile Homes** / ac) and one **Mobile Home** per **Lot** in a **Mobile Home** subdivision or **Mobile Home Site** in a **Mobile Home Park**.

9.3.4 Subdivision Lot Area and Dimensions

.1 Subdivision regulations for **Mobile Home Parks**:

Minimum **Lot Area**: 2 ha (4.94 ac)
Minimum **Lot Depth**: 50.0 m
Minimum **Lot Width**: 50.0 m

.2 Development regulations for **Mobile Home Parks**:

Lot Line	Setback	Maximum Site Coverage
Front	4.5 m	50%
Rear	4.5 m	
Side	4.5 m	
Flanking Side	4.5 m	

.3 Development regulations for **Mobile Home Sites** within a **Mobile Home Park** or **Lots** within a **Mobile Home** subdivision:

i. **Mobile Home Site** dimensions:

Minimum Area: 250.0 m^2
Minimum Depth: 25.0 m
Minimum Width: **Interior Lot**: 10.0 m
Exterior Lot: 12.0 m

ii. **Buildings** and **Structures** must be sited at least the distance indicated in the following table from an abutting **Street**, **Lot**, **Laneway** or **Alley**, according to the character of the **Building** or **Structure** described in the right-hand column of the table.

Lot Line Abutting a:	Minimum Setback		
	Dwelling Unit(s)	Accessory Building(s)	Garage or carport
Street	4.0 m	4.0 m	6.0 m
Laneway or Alley	1.5 m	1.5 m	N/A
Housing Lot	1.5 m	1.5 m	N/A
Non-housing Lot	3.0 m	1.5 m	N/A

iii. **Buildings** and **Structures** of the type indicated in the left-hand column of the following table must not exceed the **Height** indicated in the right-hand column of the table.

Type	Maximum Height
Mobile Home	8.0 m
Accessory Building(s)	4.5 m

9.3.5 Development Regulations

.1 Each **Mobile Home** shall be provided with an individual **Mobile Home Site**, with either public or private road access.

.2 One **Office** is permitted for the management and operation of a **Mobile Home Park**. No other **Office Uses** are permitted.

9.4 MUM – Multi-Unit: Medium Scale

9.4.1 Purpose

To allow for a range of small to medium scale housing development up to 4 **Storeys** in **Height**, in the form of **Townhouses** and multi-unit housing in developing and redeveloping areas. **Small Scale Housing** development is not intended in this zone unless it forms part of a larger multi-unit housing development. The scale of development in this zone may act as a transition between **Small Scale Housing** development and **Large Scale Multi-unit Housing** development exceeding 4 **Storeys** in **Height**.

9.4.2 Permitted Uses

Uses permitted as **Principal** or **Accessory Uses** in this zone are indicated with the symbol ● in the following table and **Uses** not listed are prohibited.

Use	Principal	Accessory
Housing		
Large Scale Multi-unit Housing	●	
Medium Scale Multi-unit Housing	●	
Small Scale Housing	●	
Small Scale Multi-unit Housing	●	
Commercial		
Home Based Business		●
Office		●
Short-term Rental Accommodation		●
Community		
Housing Care Centre	●	
Supportive Housing	●	
Agricultural		
Urban Agriculture		●

9.4.3 Density of Housing Use

The maximum **Density** is 1.25 **FAR**.

9.4.4 Subdivision Lot Area and Dimensions

Minimum **Lot Area**: 1,000 m^2 (0.25 ac)
Minimum **Lot Width**: **Interior Lot**: 20 m
Exterior Lot: 26 m

9.4.5 Siting of Buildings

Buildings and **Structures** must be sited at least the distance indicated in the following table from an abutting **Street**, **Lot**, **Laneway** or **Alley**, according to the character of the **Building** or **Structure** described in the right-hand column of the tab.

Lot Line Abutting a:	**Minimum Setback**		
	Dwelling Unit(s)	**Accessory Building(s)**	**Garage or carport**
Street	4.0 m	4.0 m	6.0 m
Laneway or Alley	4.0 m	1.5 m	N/A
Lot	3.0 m	1.5 m	N/A
Party Wall	0.0 m	0.0 m	N/A

9.4.6 Size of Buildings

Buildings and **Structures** of the type indicated in the left-hand column of the following table must not exceed the **Height** indicated in the right-hand column of the table.

Type	**Maximum Height**
Dwelling Unit(s)	18 m (4 **Storeys**)
Accessory Dwelling Unit(s)	8 m (2 **Storeys**)
Accessory Building(s)	4.5 m

9.4.7 Development Regulations

.1 **Lots** in this zone must be provided with **Landscaping** to at least the extent indicated in the left-hand column of the following table and **Dwelling Units** must be provided with **Amenity Areas** of at least the extent indicated in the right-hand column of the table.

Minimum Landscaping Area	**Minimum Common & Private Amenity Area(s)**
30%	5 m^2 / bachelor **Dwelling Unit** 10 m^2 / 1 bedroom **Dwelling Unit** 15 m^2 / **Dwelling Unit** with more than 1 bedroom

.2 Maximum total length of any **Building Frontage** for new construction, and of additions including the length of an existing **Building Frontage**, is 100 m.

.3 Common **Buildings**, facilities and amenities in strata plans shall be treated as **Accessory Buildings** for the purposes of determining their permitted **Height** and siting.

.4 One **Office** may be operated for management and operation of the multi-unit housing development. No other **Office Uses** are permitted.

.5 **Vehicle** access to the development is only permitted through either a **Drive Aisle** shared by at least 3 units or a rear **Laneway**.

.6 A **Small Scale Housing Use** must only be located on the same **Lot** or **Site** as a **Small**, **Medium** or **Large Scale Multi-Unit Housing Use**.

9.5 MSH – Medium Scale Housing

9.5.1 Purpose

To allow for a range of medium scale housing development up to 8 **Storeys** in **Height**, in the form of multi-unit housing in developing and redeveloping areas. **Small Scale Multi-unit Housing** development is not intended in this zone unless they form part of a **Medium** or **Large Scale Multi-unit Housing** development.

9.5.2 Permitted Uses

Uses permitted as **Principal** or **Accessory Uses** in this zone are indicated with the symbol ● in the following table and **Uses** not listed are prohibited.

Use	Principal	Accessory
Housing		
Large Scale Multi-unit Housing	●	
Medium Scale Multi-unit Housing	●	
Small Scale Multi-unit Housing	●	
Commercial		
Accessory Parking		●
Home Based Business		●
Office		●
Short-term Rental Accommodation		●
Community		
Housing Care Centre	●	
Supportive Housing	●	
Agricultural		
Urban Agriculture		●

9.5.3 Density of Housing Use

The maximum **Density** is 3.0 **FAR**.

9.5.4 Subdivision Lot Area and Dimensions

Minimum **Lot Area**: 1,400 m^2 (0.35 ac)
Minimum **Lot Width**: **Interior Lot**: 30 m
Exterior Lot: 36 m

9.5.5 Siting of Buildings

Buildings and **Structures** must be sited at least the distance indicated in the following table from an abutting **Street**, **Lot**, **Laneway** or **Alley**, according to the character of the **Building** or **Structure** described in the right-hand column of the table.

Lot Line Abutting a:	**Minimum Setback**	
	Dwelling Unit(s)	**Accessory Building(s)**
Street	4.0 m	4.0 m
Laneway or Alley	4.0 m	1.5 m
Lot	3.0 m	1.5 m
Party Wall	0.0 m	0.0 m

9.5.6 Size of Buildings

Buildings and **Structures** of the type indicated in the left-hand column of the following table must not exceed the **Height** indicated in the right-hand column of the table.

Type	**Maximum Height**
Dwelling Unit(s)	30 m (8 **Storeys**)
Accessory Building(s)	4.5 m

9.5.7 Development Regulations

.1 **Lots** in this zone must be provided with **Landscaping** to at least the extent indicated in the left-hand column of the following table and **Dwelling Units** must be provided with **Amenity Areas** of at least the extent indicated in the right-hand column of the table.

Minimum Landscaping Area	**Minimum Common & Private Amenity Area(s)**
25%	5 m^2 / bachelor **Dwelling Unit** 10 m^2 / 1 bedroom **Dwelling Unit** 15 m^2 / **Dwelling Unit** with more than 1 bedroom

.2 Maximum total length of any **Building Frontage** for new construction, and of additions including the length of an existing **Building Frontage**, is 100 m.

.3 Common **Buildings**, facilities and amenities in strata plans shall be treated as **Accessory Buildings** for the purposes of determining their permitted **Height** and siting.

.4 One **Office** may be operated for management and operation of the multi-unit housing development. No other **Office Uses** are permitted.

.5 **Vehicle** access to the development is only permitted through either a **Drive Aisle** shared by at least 3 units or a rear **Laneway**.

.6 A **Small Scale Multi-Unit Housing Use** must only be located on the same **Lot** or **Site** as a **Medium** or **Large Scale Multi-Unit Housing Use**.

SECTION 10: Resort

10.1 RTH – Resort Tourist Housing

10.1.1 Purpose

To provide a zone for the development of a variety of housing forms for **Use** within a comprehensively planned resort community.

10.1.2 Permitted Uses

Uses permitted as **Principal** or **Accessory Uses** in this zone are indicated with the symbol ● in the following table and **Uses** not listed are prohibited.

Use	Principal	Accessory
Housing		
Small Scale Housing	●	
Small Scale Multi-unit Housing	●	
Commercial		
Home Based Business		●
Office		●
Resort Accommodation	●	
Short-term Rental Accommodation		●
Community		
Housing Care Centre	●	
Supportive Housing	●	
Agricultural		
Urban Agriculture		●

10.1.3 Density of Housing Use

The number and type of **Dwelling Units** on a **Lot** with characteristics indicated in the second, third, fourth and fifth columns of the following table must not exceed the number indicated in the right-hand column of the table.

Class	Community System		Inside the Urban Containment Boundary	Lot Area	Maximum Density
	Water	Sewer			
1	N/A	No	N/A	Any **Lot Area**	1 **Dwelling Unit**, plus 1 **Secondary Suite**
2	N/A	Yes	N/A	Any **Lot Area**	1 **Dwelling Unit**, plus 1 **Secondary Suite**, plus 1 **Accessory Dwelling Unit**
3	Yes	Yes	Yes	Up to 280 m^2	3 **Dwelling Units**
4	Yes	Yes	Yes	280 m^2 to 4,050 m^2	The greater of: a) 4 **Dwelling Units**; or b) 60 **Dwelling Units** / ha (24 **Dwelling Units** / ac)

10.1.4 Subdivision Lot Area and Dimensions

Community Sewer System	Minimum Lot Area	Minimum Lot Width
Not Connected	10,000 m^2 (2.47 ac)	30.0 m
Connected	250 m^2 (0.06 ac)	10.0 m

10.1.5 Siting of Buildings

Buildings and **Structures** must be sited at least the distance indicated in the following table from an abutting **Street**, **Lot**, **Laneway** or **Alley**, according to the character of the **Building** or **Structure** described in the right-hand column of the table.

Lot Line Abutting a:	Minimum Setback		
	Dwelling Unit(s)	Accessory Building(s)	Garage or carport
Street	4.0 m	4.0 m	6.0 m
Laneway or **Alley**	1.5 m	1.5 m	N/A
Housing-based Lot	1.5 m	1.5 m	N/A
Non-housing-based Lot	3.0 m	1.5 m	N/A
Party Wall	0.0 m	0.0 m	N/A

10.1.6 Size of Buildings

Buildings and **Structures** of the type indicated in the left-hand column of the following table must not exceed the **Height** indicated in the right-hand column of the table.

Type	Maximum Height
Dwelling Unit(s)	11 m (3 **Storeys**)
Accessory Dwelling Unit(s)	8 m (2 **Storeys**)
Accessory Building(s)	4.5 m

10.1.7 Development Regulations

.1 **Lots** in the classes indicated in the left-hand column of the following table must be provided with **Landscaping** to at least the extent indicated in the right-hand column of the table, and lot classes shall be determined in accordance with the table in Section 10.1.3.

Class	Minimum Landscaping Area
1	50%
2	40%
3	25%
4	30%

.2 Maximum total length of any **Building Frontage** for new construction, and of additions including the length of an existing **Building Frontage**, is 30 m.

.3 Where a proposed **Building** is located on a **Lot** abutting a **Laneway** or **Alley**, **Vehicle** access to the **Parking Area** serving the **Building** is only permitted from the **Laneway** or **Alley**.

.4 Common **Buildings**, facilities and amenities in strata plans shall be treated as **Accessory Buildings** for the purposes of determining their permitted **Height** and siting.

.5 One **Office** may be operated for management and operation of the multi-unit housing development. No other **Office Uses** are permitted.

10.2 RCC – Resort Commercial Centre

10.2.1 Purpose

To designate and preserve land for mixed use development of destination commercial visitor accommodation in a pedestrian oriented resort environment providing a mixture of recreational, cultural, retail, and entertainment services, and to allow for permanent residences.

10.2.2 Permitted Uses

Uses permitted as **Principal** or **Accessory Uses** in this zone are indicated with the symbol ● in the following table and **Uses** not listed are prohibited.

Use	Principal	Accessory
Housing		
Large Scale Multi-unit Housing	●	
Medium Scale Multi-unit Housing	●	
Mixed Use Housing	●	
Security or Operator Dwelling Unit		●
Small Scale Housing	●	
Small Scale Multi-unit Housing	●	
Commercial		
Accessory Parking		●
Bar	●	
Cannabis Retail Store	●	
Cannabis Lounge		●
Commercial Storage		●
Drive-through Services		●
Food and Beverage Service	●	
Grocery Store	●	
Health Service	●	
Home Based Business		●
Hotel	●	
Housing Sales Centre		●
Indoor Sales and Service	●	
Light Manufacturing	●	
Liquor Store	●	
Major Indoor Entertainment	●	

Use	Principal	Accessory
Commercial continued		
Minor Indoor Entertainment	●	
Office	●	
Outdoor Vending		●
Resort Accommodation	●	
Shopping Centre	●	
Short-term Rental Accommodation	●	
Standalone Parking Facility	●	
Temporary Storage		●
Community		
Child Care Service	●	
Community Service	●	
Housing Care Centre	●	
Special Event		●
Supportive Housing	●	
Basic Services		
Emergency Services	●	
Essential Utility		●
Minor Utility Services		●

10.2.3 Density of Use

The maximum **Density** is 5.0 **FAR**.

10.2.4 Subdivision Lot Area and Dimensions

Community Sewer System	Minimum Lot Area	Minimum Lot Width
Not Connected	10,000 m^2 (2.47 ac)	30 m
Connected	2,025 m^2 (0.5 ac)	30 m

10.2.5 Siting of Buildings

Buildings and **Structures** must be sited at least the distance indicated in the following table from an abutting **Street**, **Lot**, **Laneway** or **Alley**, according to the character of the **Building** or **Structure** described in the right-hand column.

Lot Line Abutting a:	**Minimum Setback**		
	Dwelling Unit(s)	**Accessory Building(s)**	**Ground-Oriented Commercial Unit(s)**
Street	4.0 m	4.0 m	1.0 m
Laneway or Alley	3.0 m	1.5 m	1.5 m
Housing Lot	3.0 m	1.5 m	1.5 m
Non-housing Lot	3.0 m	1.5 m	0.0 m
Party Wall	0.0 m	0.0 m	0.0 m

10.2.6 Size of Buildings

Buildings and **Structures** of the type indicated in the left-hand column of the following table must not exceed the **Height** indicated in the right-hand column of the table.

Type	**Maximum Height**
Principal Building(s)	38 m (12 **Storeys**)
Accessory Building(s)	4.5 m

10.2.7 Development Regulations

.1 **Lots** in this zone must be provided with **Landscaping** to at least the extent indicated in the left-hand column of the following table and **Dwelling Units** must be provided with **Amenity Areas** of at least the extent indicated in the right-hand column of the table.

Minimum Landscaping Area	**Minimum Common & Private Amenity Area(s)**
20%	5 m^2 / bachelor **Dwelling Unit** 10 m^2 / 1 bedroom **Dwelling Unit** 15 m^2 / **Dwelling Unit** with more than 1 bedroom

.2 Where a proposed **Building** is located on a **Lot** abutting a **Laneway** or **Alley**, **Vehicle** access to the **Parking Area** serving the **Building** is only permitted from the **Laneway**.

.3 Common **Buildings**, facilities and amenities in strata plans shall be treated as **Accessory Buildings** for the purposes of determining their permitted **Height** and siting.

SECTION 11: Commercial Mixed-Use Zones

11.1 CMUN – Commercial Mixed Use: Neighbourhood

11.1.1 Purpose

To allow for a range of small scale commercial and **Mixed-Use Housing** development up to 4 **Storeys** in **Height** to provide goods and services to residents at the neighbourhood level.

11.1.2 Permitted Uses

Uses permitted as **Principal** or **Accessory Uses** in this zone are indicated with the symbol ● in the following table and **Uses** not listed are prohibited.

Use	Principal	Accessory
Housing		
Large Scale Multi-unit Housing	●	
Medium Scale Multi-unit Housing	●	
Mixed Use Housing	●	
Small Scale Housing	●	
Small Scale Multi-unit Housing	●	
Commercial		
Accessory Parking		●
Food and Beverage Service	●	
Grocery Store	●	
Health Service	●	
Home Based Business		●
Housing Sales Centre		●
Indoor Sales and Service	●	
Light Manufacturing	●	
Minor Indoor Entertainment	●	
Office	●	
Short-term Rental Accommodation		●
Temporary Storage		●
Community		
Child Care Service	●	
Community Service	●	
Housing Care Centre	●	
Special Event		●
Supportive Housing	●	

Use	Principal	Accessory
Basic Services		
Emergency Services	●	
Essential Utility		●
Health Care Facility	●	
Minor Utility Services		●
Agricultural		
Urban Agriculture	●	

11.1.3 Density of Use

The maximum **Density** is 2.0 **FAR**.

11.1.4 Subdivision Lot Area and Dimensions

Minimum **Lot Area**: 500 m^2 (0.125 ac)
Minimum **Lot Width**: **Interior Lot**: 12 m
Exterior Lot: 18 m

11.1.5 Siting of Buildings

Buildings and **Structures** must be sited at least the distance indicated in the following table from an abutting **Street**, **Lot** or **Laneway** or **Alley**, according to the character of the **Building** or **Structure** described in the right-hand column of the table.

Lot Line Abutting a:	**Minimum Setback**			
	Commercial Uses	**Dwelling Unit(s)**	**Accessory Building(s)**	**Garage or carport**
Street	1.0 m	4.0 m	4.0 m	6.0 m
Laneway or Alley	1.5 m			
Housing-based Lot	1.5 m			
Non-housing-based Lot	0.0 m	1.5 m	1.5 m	N/A
Party Wall	0.0 m	0.0 m	0.0 m	N/A

11.1.6 Size of Buildings

Buildings and **Structures** of the type indicated in the left-hand column of the following table must not exceed the **Height** indicated in the right-hand column of the table.

Type	Maximum Height
Principal Building(s)	18 m (4 **Storeys**)
Accessory Dwelling Unit (s)	8 m (2 **Storeys**)
Accessory Building(s)	4.5 m

11.1.7 Development Regulations

.1 **Lots** in this zone must be provided with **Landscaping** to at least the extent indicated in the left-hand column of the following table and **Dwelling Units** must be provided with **Amenity Areas** of at least the extent indicated in the right-hand column of the table.

Minimum Landscaping Area	Minimum Common & Private Amenity Area(s)
30%	5 m^2 / bachelor **Dwelling Unit** 10 m^2 / 1 bedroom **Dwelling Unit** 15 m^2 / **Dwelling Unit** with more than 1 bedroom

.2 Maximum total length of any **Building Frontage** for new construction, and of additions including the length of an existing **Building Frontage**, is 50 m.

.3 **Vehicle** access must be from an abutting **Laneway**. Where there is no abutting **Laneway**, **Vehicle** access must be from a **Flanking Street** for **Corner Sites**.

.4 Despite the **Setbacks** specified in Subsection 11.1.5:

i. **Surface Parking Lots** and loading, storage, and waste collection areas must not be located between a **Principal Building** and a **Street** and must provide a minimum 2.0 m wide **Landscape Buffer** where **Adjacent** to a **Street**.

ii. **Surface Parking Lots** and loading, storage, and waste collection areas may project into, or be located within, a **Setback** abutting another **Site** where a minimum 1.5 m wide **Landscape Buffer** is provided **Adjacent** to the **Lot Line**.

.5 A **Small Scale Housing Use** or **Small**, **Medium** or **Large Scale Multi-unit Housing Use** must only be located on the same **Lot** or **Site** as a **Mixed Use Housing Use**.

11.2 CMUB – Commercial Mixed Use: Business

11.2.1 Purpose

To allow for a range of medium scale commercial and **Mixed-Use Housing** development up to 8 **Storeys** in **Height** to provide employment opportunities and housing at the community level.

11.2.2 Permitted Uses

Uses permitted as **Principal** or **Accessory Uses** in this zone are indicated with the symbol ● in the following table and **Uses** not listed are prohibited.

Use	Principal	Accessory
Housing		
Large Scale Multi-unit Housing	●	
Medium Scale Multi-unit Housing	●	
Mixed-Use Housing	●	
Commercial		
Accessory Parking		●
Bar	●	
Cannabis Retail Store	●	
Cannabis Lounge		●
Commercial Storage		●
Food and Beverage Service	●	
Grocery Store	●	
Health Service	●	
Home Based Business		●
Hotel	●	
Housing Sales Centre		●
Indoor Sales and Service	●	
Light Manufacturing	●	
Liquor Store	●	
Major Indoor Entertainment	●	
Minor Indoor Entertainment	●	
Office	●	
Outdoor Sales and Service	●	
Outdoor Vending		●
Shopping Centre	●	
Short-term Rental Accommodation		●
Temporary Storage		●
Vehicle Support Service	●	

Use	Principal	Accessory
Industrial		
Indoor Self Storage		●
Community		
Child Care Service	●	
Community Service	●	
Housing Care Centre	●	
Special Event		●
Supportive Housing	●	
Basic Services		
Emergency Services	●	
Essential Utility		●
Health Care Facility	●	
Minor Utility Services		●

11.2.3 Density of Use

The maximum **Density** is 3.5 **FAR**.

11.2.4 Subdivision Lot Area and Dimensions

Minimum **Lot Area**: 2,025 m^2 (0.5 ac)
Minimum **Lot Width**: 30 m

11.2.5 Siting of Buildings

Buildings and **Structures** must be sited at least the distance indicated in the following table from an abutting **Street**, **Lot**, **Laneway** or **Alley**, according to the character of the **Building** or **Structure** described in the right-hand column of the table.

Lot Line Abutting a:	Minimum Setback
Street	1.0 m
Laneway or Alley	1.5 m
Housing-based Lot	1.5 m
Non-housing-based Lot	0.0 m
Party Wall	0.0 m

11.2.6 Size of Buildings

Buildings and **Structures** of the type indicated in the left-hand column of the following table must not exceed the **Height** indicated in the right-hand column of the table.

Type	Maximum **Height**
Principal Building(s)	30 m (8 **Storeys**)
Accessory Building(s)	4.5 m

11.2.7 Development Regulations

.1 **Lots** in this zone must be provided with **Landscaping** to at least the extent indicated in the left-hand column of the following table and **Dwelling Units** must be provided with **Amenity Areas** of at least the extent indicated in the right-hand column.

Minimum **Landscaping Area**	Minimum **Common & Private Amenity Area(s)**
20%	5 m^2 / bachelor **Dwelling Unit** 10 m^2 / 1 bedroom **Dwelling Unit** 15 m^2 / **Dwelling Unit** with more than 1 bedroom

.2 Maximum total length of any **Building Frontage** for new construction, and of additions including the length of an existing **Building Frontage**, is 80 m.

.3 **Vehicle** access must be from an abutting **Laneway**. Where there is no abutting **Laneway**, **Vehicle** access must be from a **Flanking Street** for **Corner Sites**.

.4 Despite the **Setbacks** specified in Subsection 11.2.5:

i. **Surface Parking Lots** and loading, storage, and waste collection areas must not be located between a **Principal Building** and a **Street** and must provide a minimum 2.0 m wide **Landscape Buffer** where **Adjacent** to a **Street**.

ii. **Surface Parking Lots** and loading, storage, and waste collection areas may project into, or be located within, a **Setback** abutting another **Site** where a minimum 1.5 m wide **Landscape Buffer** is provided adjacent to the **Lot Line**.

.5 **Medium** or **Large Scale Multi-unit Housing Uses** must only be located on the same **Lot** or **Site** as a **Mixed Use Housing Use**.

11.3 CMUC – Commercial Mixed Use: Centre

11.3.1 Purpose

To allow for a range of large scale commercial and **Mixed-Use Housing** development up to 16 **Storeys** in **Height** to provide employment opportunities and housing in the City centre areas.

11.3.2 Permitted Uses

Uses permitted as **Principal** or **Accessory Uses** in this zone are indicated with the symbol ● in the following table and **Uses** not listed are prohibited.

Use	Principal	Accessory
Housing		
Large Scale Multi-unit Housing	●	
Medium Scale Multi-unit Housing	●	
Mixed Use Housing	●	
Commercial		
Accessory Parking		●
Bar	●	
Cannabis Retail Store	●	
Cannabis Lounge		●
Food and Beverage Service	●	
Grocery Store	●	
Health Service	●	
Home Based Business		●
Hotel	●	
Housing Sales Centre		●
Indoor Sales and Service	●	
Light Manufacturing	●	
Liquor Store	●	
Major Indoor Entertainment	●	
Minor Indoor Entertainment	●	
Office	●	
Outdoor Vending		●
Short-term Rental Accommodation		●
Temporary Storage		●
Community		
Child Care Service	●	
Community Service	●	
Housing Care Centre	●	

Use	Principal	Accessory
Community continued		
Special Event		●
Supportive Housing	●	
Basic Services		
Emergency Services	●	
Essential Utility		●
Health Care Facility	●	

11.3.3 Density of Use

The maximum **Density** is 5.0 **FAR**.

11.3.4 Subdivision Lot Area and Dimensions

Minimum **Lot Area**: 2,025 m^2 (0.5 ac)
Minimum **Lot Width**: 20 m

11.3.5 Siting of Buildings

Buildings and **Structures** must be sited at least the distance indicated in the following table from an abutting **Street**, **Lot**, **Laneway** or **Alley**, according to the character of the **Building** or **Structure** described in the right-hand column of the table.

Lot Line **Abutting a:**	**Minimum Setback**
Street	1.0 m
Laneway **or** Alley	1.5 m
Housing-based Lot	3.0 m
Non-housing-based Lot	0.0 m
Party Wall	0.0 m

11.3.6 Size of Buildings

Buildings and **Structures** of the type indicated in the left-hand column of the following table must not exceed the **Height** indicated in the right-hand column of the table.

Type	Maximum Height
Principal Building(s)	60 m (16 Storeys)
Accessory Building(s)	4.5 m

11.3.7 Development Regulations

.1 Minimum Common and Private Amenity Area is 5 m^2 per Dwelling Unit.

.2 Maximum total length of any Building Frontage for new construction, and of additions including the length of an existing Building Frontage, is 100 m.

.3 Vehicle access must be from an abutting Laneway. Where there is no abutting Laneway, Vehicle access must be from a Flanking Street for Corner Sites.

.4 Despite the Setbacks specified in Subsection 11.3.5:

i. Surface Parking Lots and loading, storage, and waste collection areas must not be located between a Principal Building and a Street and must provide a minimum 2.0 m wide Landscape Buffer where Adjacent to a Street.

ii. Surface Parking Lots and loading, storage, and waste collection areas may project into, or be located within, a Setback abutting another Site where a minimum 1.5 m wide Landscape Buffer is provided Adjacent to the Lot Line.

.5 Medium or Large Scale Multi-unit Housing Uses must only be located on the same Lot or Site as a Mixed-Use Housing Use.

SECTION 12: Industrial

12.1 INDL – Light Industrial

12.1.1 Purpose

To allow for light industrial and a variety of small commercial businesses with a high standard of design that carry out a portion of their operation outdoors or require outdoor storage areas.

12.1.2 Permitted Uses

Uses permitted as **Principal** or **Accessory Uses** in this zone are indicated with the symbol ● in the following table and **Uses** not listed are prohibited.

Use	Principal	Accessory
Housing		
Security or Operator Dwelling Unit		●
Commercial		
Accessory Parking		●
Auction Sales	●	
Bar	●	
Cannabis Retail Store	●	
Cannabis Lounge		●
Commercial Storage		●
Food and Beverage Service	●	
Indoor Sales and Service	●	
Light Manufacturing	●	
Liquor Store	●	
Minor Indoor Entertainment	●	
Office		●
Outdoor Sales & Service	●	
Outdoor Vending		●
Temporary Storage		●
Vehicle Storage	●	
Vehicle Support Services	●	
Industrial		
Crematorium	●	
Drive-through Vehicle Services	●	
Indoor Self Storage	●	
Light Industrial	●	

Use	Principal	Accessory
Industrial continued		
Major Alcohol Production	●	
Shipping Container Storage	●	
Community		
Community Service	●	
Special Event		●
Basic Services		
Emergency Services	●	
Essential Utility		●
Minor Utility Services		●
Recycling Drop-off Centre	●	
Transit Facility	●	

12.1.3 Density of Use

The maximum **Density** is 2.0 **FAR**.

12.1.4 Subdivision Lot Area and Dimensions

Minimum **Lot Area**: 2,025 m^2 (0.5 ac)
Minimum **Lot Width**: 30 m

12.1.5 Siting of Buildings

Buildings and **Structures** must be sited at least the distance indicated in the following table from an abutting **Street**, **Lot**, **Laneway** or **Alley**, according to the character of the **Building** or **Structure** described in the right-hand column of the table.

Lot Line Abutting a:	**Minimum Setback**
Street	6.0 m
Laneway or Alley	1.5 m
Housing-based Lot	6.0 m
Non-housing--based Lot	0.0 m
Party Wall	0.0 m

12.1.6 Size of Buildings

The maximum **Height** of **Buildings** and **Structures** is 15 m.

12.1.7 Development Regulations

.1 The minimum **Landscaping** area is 20%.

.2 One **Security or Operator Dwelling Unit** is permitted on a **Lot**.

12.2 INDA – Airport Industrial

12.2.1 Purpose

A zone for the development and operation of an airport and associated industrial services.

12.2.2 Permitted Uses

Uses permitted as **Principal** or **Accessory Uses** in this zone are indicated with the symbol ● in the following table and **Uses** not listed are prohibited.

Use	Principal	Accessory
Housing		
Security or Operator Dwelling Unit		●
Commercial		
Accessory Parking		●
Bar		●
Commercial Storage		●
Food and Beverage Service		●
Indoor Sales and Service		●
Light Manufacturing		●
Minor Fuel Station		●
Office		●
Outdoor Vending		●
Temporary Storage		●
Industrial		
Aerospace Research and Development	●	
Aircraft Services	●	
Airport Terminal and Navigation Facilities	●	
Light Industrial	●	
Major Fueling Station		●
Community		
Special Event		●
Basic Services		
Emergency Services	●	
Essential Utility		●
Minor Utility Services		●
Transit Facility		●

12.2.3 Subdivision Lot Area and Dimensions

Minimum **Lot Area**: 2,025 m^2 (0.5 ac)
Minimum **Lot Width**: 25 m

12.2.4 Siting of Buildings

Buildings and **Structures** must be sited at least the distance indicated in the following table from an abutting **Street**, **Lot**, **Laneway** or **Alley**, according to the character of the **Building** or **Structure** described in the right-hand column of the table.

Lot Line Abutting a:	**Minimum Setback**
Street	6.0 m
Laneway or Alley	4.5 m
Housing-based Lot	10.0 m
Non-housing-based Lot	0.0 m
Party Wall	0.0 m

12.2.5 Size of Buildings

Buildings and **Structures** of the type indicated in the left-hand column of the following table must not exceed the **Height** indicated in the right-hand column of the table.

Type	**Maximum Height**
Airport Facilities and Structures	**Height** as established in the *Regional Airport Zoning Regulations Bylaw No. 4578*
Airport Industrial Buildings	10 m
Mechanical Structures	unrestricted

12.2.6 Development Regulations

.1 The maximum **Site Coverage** is 80%.

.2 One **Security or Operator Dwelling Unit** is permitted on a **Lot**.

SECTION 13: Community & Servicing

13.1 CMTY – Community

13.1.1 Purpose

To provide a zone for community **Uses** and **Accessory** commercial **Uses**.

13.1.2 Permitted Uses

Uses permitted as **Principal** or **Accessory Uses** in this zone are indicated with the symbol ● in the following table and **Uses** not listed are prohibited.

Use	Principal	Accessory
Housing		
Security or Operator Dwelling Unit		●
Commercial		
Accessory Parking		●
Food and Beverage Service		●
Health Service	●	
Indoor Sales and Service		●
Major Indoor Entertainment	●	
Minor Indoor Entertainment	●	
Office	●	
Outdoor Vending		●
Temporary Storage		●
Community		
Child Care Service	●	
Community Service	●	
Government Services	●	
Housing Care Centre	●	
Library	●	
Outdoor Recreation Facility	●	
Park	●	
School	●	
Special Event		●
Supportive Housing	●	

Use	Principal	Accessory
Basic Services		
Cemetery	●	
Detention Facility	●	
Emergency Services	●	
Essential Utility		●
Health Care Facility	●	
Minor Utility Services		●
Transit Facility		●

13.1.3 Density of Use

The maximum **Density** is 3.0 **FAR**.

13.1.4 Subdivision Lot Area and Dimensions

The minimum **Lot Area** is 500 m^2 (0.12 ac).

13.1.5 Siting of Buildings

Buildings and **Structures** must be sited at least the distance indicated in the following table from an abutting **Street**, **Lot**, **Laneway** or **Alley**, according to the character of the **Building** or **Structure** described in the right-hand column of the table.

Lot Line Abutting a:	Minimum Setback	
	Principal Building(s)	Accessory Building(s)
Street	6.0 m	6.0 m
Laneway or Alley	7.5 m	1.5 m
Housing-based Lot	4.5 m	1.5 m
Non-housing-based Lot	3.0 m	1.5 m
Party Wall	0.0 m	0.0 m

13.1.6 Size of Buildings

Buildings and **Structures** of the type indicated in the left-hand column of the following table must not exceed the **Height** indicated in the right-hand column of the table.

Type	Maximum Height
Principal Building(s)	22 m
Accessory Building(s)	4.5 m

13.1.7 Development Regulations

.1 The minimum **Landscaping** area is 10%.

.2 One **Security or Operator Dwelling Unit** is permitted on a **Lot**.

13.2 UTIL – Utilities

13.2.1 Purpose

To allow for development and protection of infrastructure, systems and facilities that provide a public benefit.

13.2.2 Permitted Uses

Uses permitted as **Principal** or **Accessory Uses** in this zone are indicated with the symbol ● in the following table and **Uses** not listed are prohibited.

Use	Principal	Accessory
Housing		
Security or Operator Dwelling Unit		●
Commercial		
Accessory Parking		●
Commercial Storage		●
Office	●	
Stand Along Parking Facility	●	
Temporary Storage		●
Community		
Park		●
Basic Services		
Emergency Services	●	
Essential Utility	●	
Major Utility Services	●	
Minor Utility Services	●	
Transit Facility	●	

13.2.3 Density

The maximum **Density** is 1.0 **FAR**.

13.2.4 Subdivision Lot Area and Dimensions

Minimum **Lot Area**: N/A
Minimum **Lot Width**: N/A

13.2.5 Siting of Buildings

Buildings and **Structures** must be sited at least the distance indicated in the following table from an abutting **Street**, **Lot**, **Laneway** or **Alley**, according to the character of the **Building** or **Structure** described in the right-hand column of the table.

Lot Line Abutting a:	**Minimum Setback**
Street	6.0 m
Laneway or Alley	4.5 m
Housing-based Lot	7.5 m
Non-housing-based Lot	4.5 m
Major Utility abutting any non-industrial Lot	10.0 m
Party Wall	0.0 m

13.2.6 Size of Buildings

Buildings and **Structures** of the type indicated in the left-hand column of the following table must not exceed the **Height** indicated in the right-hand column of the table.

Type	**Maximum Height**
Building(s)	12 m
Mechanical Structure(s)	unrestricted

13.2.7 Development Regulations

.1 The minimum **Landscaping** area is 10%.

.2 One **Security or Operator Dwelling Unit** is permitted on a **Lot**.

SECTION 14: Parks

14.1 PANS – Parks & Natural Spaces

14.1.1 Purpose

To provide a zone primarily for the preservation and enhancement of natural space, for the protection of sensitive or endangered species habitat and identified cultural sites, and outdoor recreation and with limited facilities.

14.1.2 Permitted Uses

Uses permitted as **Principal** or **Accessory Uses** in this zone are indicated with the symbol ● in the following table and **Uses** not listed are prohibited.

Use	Principal	Accessory
Housing		
Security or Operator Dwelling Unit		●
Commercial		
Accessory Parking		●
Campsite	●	
Food and Beverage Service		●
Indoor Sales and Service		●
Marina	●	
Major Indoor Entertainment	●	
Minor Indoor Entertainment	●	
Office		●
Outdoor Entertainment	●	
Outdoor Vending		●
Temporary Storage		●
Community		
Child Care Service		●
Community Service		●
Housing Care Centre		●
Library		●

Use	Principal	Accessory
Community Continued		
Outdoor Recreation Facility	●	
Park	●	
School		●
Special Event		●
Supportive Housing		●
Basic Services		
Cemetery	●	
Emergency Services	●	
Essential Utility		●
Minor Utility Services		●
Transit Facility		●
Agricultural		
Urban Agriculture		●

14.1.3 Density of Use

The maximum **Density** is 1.0 **FAR**.

14.1.4 Subdivision Lot Area and Dimensions

Minimum **Lot Area**: N/A
Minimum **Lot Width**: N/A

14.1.5 Siting of Buildings

Buildings and **Structures** must be sited at least the distance indicated in the following table from an abutting **Street**, **Lot**, **Laneway** or **Alley**, according to the character of the **Building** or **Structure** described in the right-hand column of the table.

Lot Line Abutting a:	**Minimum Setback**
Street	6.0 m
Laneway or Alley	3.0 m
Housing-based Lot	4.5 m
Non-housing-based Lot	3.0 m
Party Wall	0.0 m

14.1.6 Size of Buildings

The maximum **Height** of **Buildings** and **Structures** is 15 m.

14.1.7 Development Regulations

.1 One **Security or Operator Dwelling Unit** is permitted on a **Lot**.

SECTION 15: Comprehensive Development

15.6 CD6 – Comprehensive Development Area 6

15.6.1 Purpose

This Zone is intended to enable a cohesive and integrated small lot residential neighbourhood with a mix of ground oriented single family housing types and a small neighbourhood mixed use commercial node.

15.6.2 Interpretation

In the event of any conflict or inconsistency between provisions set out in this CD6 Zone and provisions set out elsewhere in Bylaw #5000, as amended, then the applicable provision in CD6 Zone shall govern and apply. Schedule B in *Zoning Bylaw #5000* does not apply.

15.6.3 Definitions

In this CD6 Zone, definitions provided in Bylaw #5000 apply. In addition, the following definitions shall apply:

Development Plan means the development intent for the CD6 Zone as shown on General Schedule # 1.

Density, gross means a measure of the intensity of development to the area of the site, and includes the whole number of units on a site measured in units/area or **floor space ratio** as the case may be.

Density, net means a measure of the intensity of development to the area of the site, and includes the whole number of units on a site measured in units/area or **floor space ratio,** as the case may be, however does not include dedicated public spaces such as parks, **streets** and **lanes**.

Housing Type means the different residential built forms which are to be constructed on the individual **lots**.

Lands means the area shown within the boundaries of General Schedule #1 to which CD6 applies.

Parcel means the individual **lots** identified on the **Development Plan.**

Phased Development Agreement means the agreement of how the **Development Plan** is to be achieved as set out in *Bylaw #5705 "City of Vernon Phased Development Agreement (McMechan) Bylaw No. 5705, 2018"*.

Row Housing, **Stacked** means **row housing**, except that **dwellings** may be arranged two deep, either horizontally so that **dwellings** may be attached at the rear as well as the side, or vertically so that

dwellings may be placed over others. Each **dwelling** will have an individual access to outside, not necessarily at grade, provided that no more than two units share a corridor, steps or path.

Secondary Suite means a self-contained secondary **dwelling** unit located within **single detached housing types 1 and 2**, or in a **secondary building**. A secondary suite has its own separate cooking, sleeping and bathing facilities. It has direct access to outside without passing through any part of the primary **dwelling** unit. The property owner must reside in either the primary dwelling unit or the **secondary suite.**

Single Detached Housing Type 1 means a detached **building** containing one **dwelling** unit, designed exclusively for occupancy by one household, and may include a secondary suite.

Single Detached Housing Type 2 means a **building** containing one **dwelling** unit designed exclusively for occupancy by one household, having one interior zero lot line side yard and one interior side yard measuring more than one metre, and may include a **secondary suite.**

Single Detached Housing Type 3 means a **building** containing one **dwelling** unit designed exclusively for occupancy by one household, having zero lot line side yards on two interior side yards, and may not include **a secondary suite.** No part of any **dwelling** is placed over another in part or in whole and every **dwelling** unit shall have a separate, individual, direct access to grade.

15.6.4 Parcels Subject to Parcel Specific Regulations

- The **Lands** may only be subdivided into **parcels** in substantial compliance with the **Development Plan** attached hereto as General Schedule #1.
- The **buildings** permitted on each parcel will be in substantial compliance with the **Development Plan** attached hereto as General Schedule #1.
- The development of each **parcel** shall be in accordance with the development regulations set out herein and within the **Phased Development Agreement**.

15.6.5 Permitted Uses

The Lands shall only be used for the following uses:

A) Parks are permitted as shown in the General Schedule #1

B) Residential

Primary Uses:

- row housing, stacked
- single detached housing, types 1, 2 and 3

Secondary Uses:

- care centre, minor
- home based businesses, minor
- secondary suites (only in single detached housing, types 1 and 2)
- utilities, minor

C) Community Neighbourhood Commercial

Primary Uses:

- artist studio
- care centre, major
- community recreation centres
- food primary establishment (excluding drive-through services)
- liquor primary establishment, minor
- participant recreation services - indoor
- personal services
- farmers' market
- public market
- retail store, convenience

Secondary Uses:

- apartment housing
- home based businesses, minor

15.6.6 Development Regulations - Density

- The minimum **net density** shall be 31 **dwelling** units per hectare (12.5 **dwelling** units per acre) and the maximum **net density** shall be 49 **dwelling** units per hectare (20 **dwelling** units per acre) of the land dedicated to residential use and the residential portion of mixed use development. **Secondary suites** shall not constitute a **dwelling** unit when calculating **density**.
- The maximum number of **dwelling units** permitted on each **parcel** shall be 1; except a maximum of 5 – 4 unit **row housing**, **stacked** developments shall be permitted within the **Development Plan**.
- The maximum community neighbourhood commercial **gross floor area** shall be 1,500m^2.

15.6.7 General Development Regulations

In the CD6 zone, no building shall be constructed, located, altered and no plan of subdivision approved except in accordance with the regulations as set out below:

Lot Size and Width

Use	Lot Size		Lot Width	
	Minimum	Maximum	Interior	Corner
Residential	120 m^2	950 m^2	5.5 m	10 m
Commercial	550 m^2	1900 m^2	5.5 m	10 m

Building Height, Maximum

Residential Buildings	Secondary Buildings and Structures	Commercial/Residential Mixed Use
10.5m. The street face of the dwellings shall not exceed 2.5 storeys.	4.5m, except may be 6.2m where a secondary suite is located above a garage	12.5m

Lot Coverage, Maximum

All structures: 85%
All impermeable surfaces: 90%

Building Siting

Front Yard, minimum	3.0 m, except it is 2.0 m for garage entrances
Rear Yard, minimum	4.5 m, except it is 1.5 m for a garage accessed off the lane
Side Yard, minimum	2.5 m for all flanking street side yards 1.2 m for Single Detached Housing Type 1 1.2 m on one side, 0.0 m on the other side for Single Detached Housing Type 2 0.0 m for Single Detached Housing Type 3
Horizontal Distance Between Buildings on the same lot, minimum	2.0m
Width of Dwelling Unit, minimum	5.5m
Usable Outdoor Private Open Space, minimum	12.0m2 per Single Detached Housing dwelling unit, all types 5.0m2 per apartment dwelling unit or stacked row housing dwelling unit

Fence Height and Siting

Front Yard, maximum height	1.0m
Rear Yard, maximum height	1.5m, except 1.2m on Mutrie Road and 43rd Avenue
Side Yard, maximum height	1.5m
Flanking Yard, maximum height	1.2m
Rear Yard, minimum setback on a lane	1.5m, except 2.0m where a garage is sited at a minimum rear yard setback of 1.5m

15.6.8 Development Regulations - Vehicle and Bicycle Parking Regulations

The general parking, loading and Class 1 and Class 2 bicycle parking regulations in *Bylaw #5000*, as amended, apply to CD6. All types of **single detached housing** will be classified as **single detached housing** for parking regulation purposes.

15.6.9 Development Regulations – Secondary Suites

The general **secondary suite** regulations in *Bylaw #5000*, as amended, apply to this CD6, except as specified below.

- The maximum floor area of a secondary suite shall be no greater than 40% of the total residential **gross floor area** on the **lot**.

15.6.10 Development Regulations – Landscape & Screening

For certainty, the regulations in *Bylaw #5000*, as amended, Section 6.0, Landscape and Screening, do not apply to **Lands** in the CD6 Zone. A detailed landscape and screening plan as per the **Phased Development Agreement** would be provided as part of the Subdivision requirements.

15.6.11 Development Regulations – other

- Where a **parcel** has access to a lane, vehicular access to the **parcel** is only permitted from the lane.
- **Apartment housing** requires separate at-grade access from the commercial uses.
- For multiple housing, one office may be operated for the sole purpose of the management and operation of the **multiple housing** development.
- In addition to the regulations listed above, other regulations may apply. These include the general development regulations of Section 4 (secondary development, yards, projections into yards, lighting, agricultural setbacks, etc.); the specific use regulations of Section 5; the **landscaping** and fencing provisions of Section 6; and, the parking and loading regulations of Section 7, unless otherwise specified in this CD6 Zone.

15.6.12 List of Schedules

The following schedule is attached hereto and forms part of this CD6:

1. General Schedule #1: Development Plan

15.6.13 Form and Character Design Guidelines

The following is provided to guide intensive residential development within Comprehensive Development Area 6, to set the terms for Development Permit requirements for subdivision and the form and character of residential and commercial development.

1.0 Neighbourhood Vision

The design of this small lot residential development is a modern and unique neighbourhood that residents are proud of. Quality building design and pedestrian friendly streets create a human scale environment that people feel comfortable in. A small commercial node with residential units above provides services to surrounding neighbourhoods. Landscape treatments soften the building massing and beautifies and cools streets, active laneways, pathways, parks and yards.

The Highlands of East Hill Neighbourhood shall:

1.1 Foster a neighbourhood that is designed to calm vehicular traffic speeds and encourage walking and cycling within a conducive and safe environment.

1.2 Orient homes towards pedestrian friendly streets with enhanced front entrances such as porches.

1.3 Use landscaping and trees to soften the small lot density of the neighbourhood – tree canopy cools, provides shade, creates habitat and aids storm water management while respecting view corridors.

Provide amenities designed for people to move, play and connect including park space, trail connections and active laneways.

1.4 Provide a variety of housing forms in each phase of the neighbourhood.

2.0 Architectural Form and Character

Architectural character at Highlands is focused on site-appropriate expression of massing and street rhythm. Design will encourage the use of complementary elements that are responsive to the specific conditions of that location. The following design principles shall apply:

2.1 Dwellings will be oriented towards the street where possible and primary vehicle access will be provided off a laneway, where one exists.

2.2 Residential development will be well articulated through the use of entryways, windows, bump outs, insets and exterior finishing treatments.

2.3 Incorporation of porches, stoops, outdoors spaces (such as patios) or combinations thereof shall be provided to soften and break-up building massing and provide protected outdoor amenity areas when feasible.

2.4 Dwellings that are located between internal roads and Mutrie Road or 43rd Avenue shall present well to both street faces through articulation and finishing.

2.5 Exterior setback wall faces (usually corner lots), where visible from streets (flanking street), shall be given an increased level of treatment to break up massing and minimize blank walls through the use of articulation and varying materials, colors, textures and landscape treatments. Particular attention and increased treatment shall also be given to 3 storey wall faces in interior side yard and flanking yards.

2.6 Where garages are accessed from a street, garage setbacks shall vary where possible to avoid uninterrupted wall faces. Where setbacks and lot sizes restrict variation, a distinct variety of garage door colours, tones, treatment and or design are required.

2.7 Building forms and rooflines shall be varied to add individuality and visual interest.

2.8 A variety of complementary materials, textures and colours will be used on adjacent and attached housing types to break up massing and provide a distinct identity between dwelling units (attached or adjacent). Repetitive and monotonous building forms and finishing shall be avoided.

2.9 Durable finishing materials shall be used for longevity. Vinyl siding is not permitted.

3.0 Fencing

Generally, front yard fences are discouraged, given small front yard setbacks. Side and rear yard fencing may provide privacy with supplemental landscaping. The following fencing principles shall apply:

3.1 Where fencing is desired, details of construction and location shall be provided as part of a Development Permit application.

3.2 A variety of complementary fencing materials, colours, styles and construction methods shall be used so that no more than two adjacent dwellings have the same fence. Repetitive and monotonous fencing shall be minimized.

3.3 Fencing and landscape treatments should promote Crime Prevention Through Environmental Design (CPTED) principles of street and lane activity observation. Generally, everything above 1.2 m in height should be permeable.

3.4 Front yard fences, and fences on Mutrie Road and 43rd Avenue, shall be a minimum of 40% permeable.

3.5 Fencing is encouraged to be combined with supplemental landscaping.

3.6 Where applicable, vegetative buffers should be provided adjacent to agricultural land as per Provincial agricultural buffer requirements.

4.0 Neighbourhood Commercial

A small mixed use commercial node is encouraged to serve surrounding neighbourhoods. The architecture and design of the commercial node shall complement the surrounding residential development. The following design principles apply:

4.1 The building shall be well articulated with entrances and windows minimizing blank walls.

4.2 The building form should reflect the intended commercial use.

4.3 A variety of colours, materials and textures will be used to break up the massing of the building.

4.4 Residential units above the commercial shall have their own separate entrance and be visually differentiated from the commercial through design treatment.

4.5 Only small scale signage is permitted to respect the residential character of the neighbourhood. Back lit signage is not permitted. Signage details shall be submitted as part of a Development Permit application.

4.6 A lighting plan, respecting CPTED principles, is required as part of a Development Permit application.

General Schedule #1

Section 16: Overlays and Modifiers

City of Vernon

ZONING MAP

Schedule "A" forming part of Bylaw No. 6000, 2024

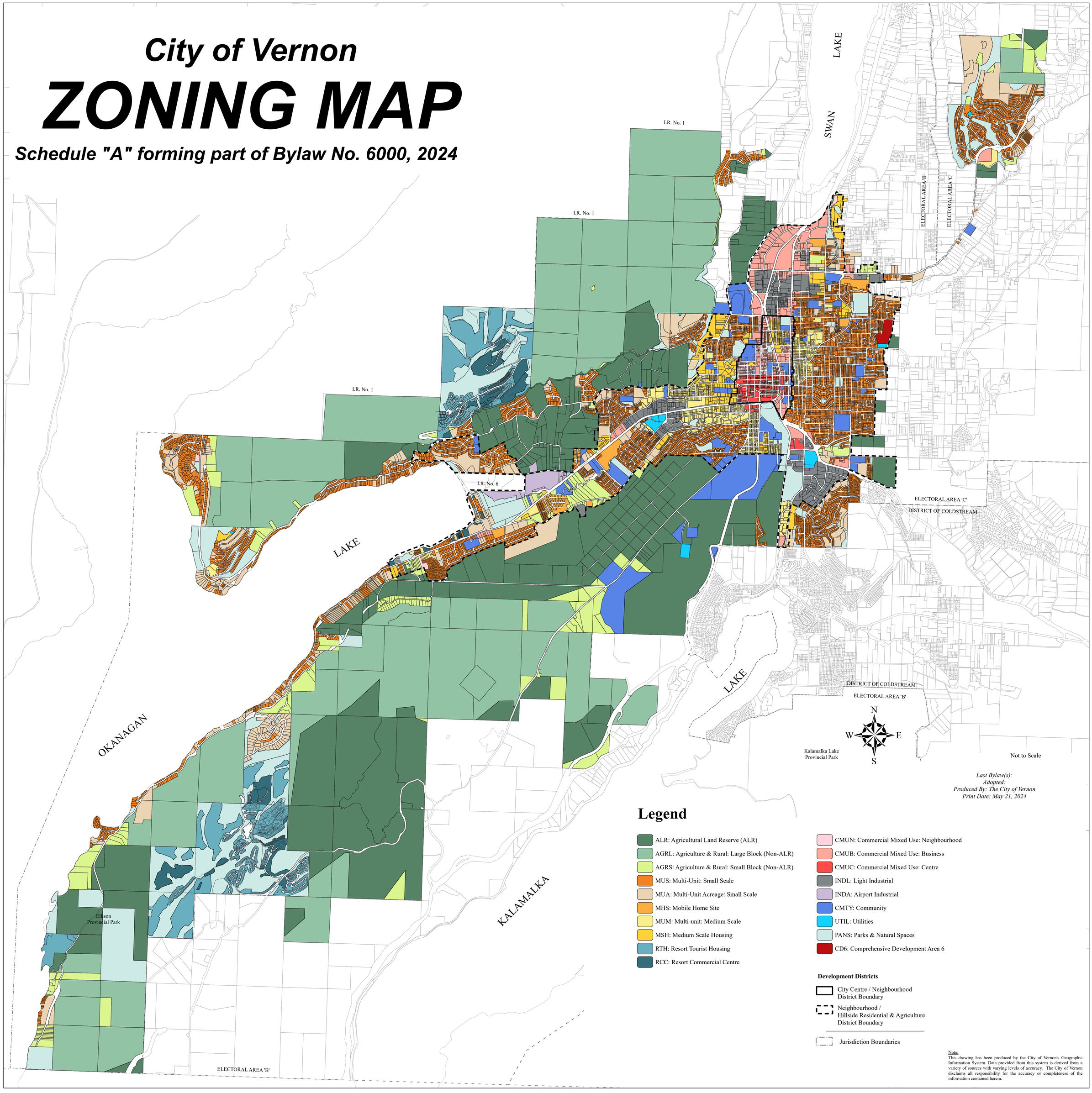

Note:
This drawing has been produced by the City of Vernon's Geographic Information System. Data provided from this system is derived from a variety of sources with varying levels of accuracy. The City of Vernon disclaims all responsibility for the accuracy or completeness of the information contained herein.

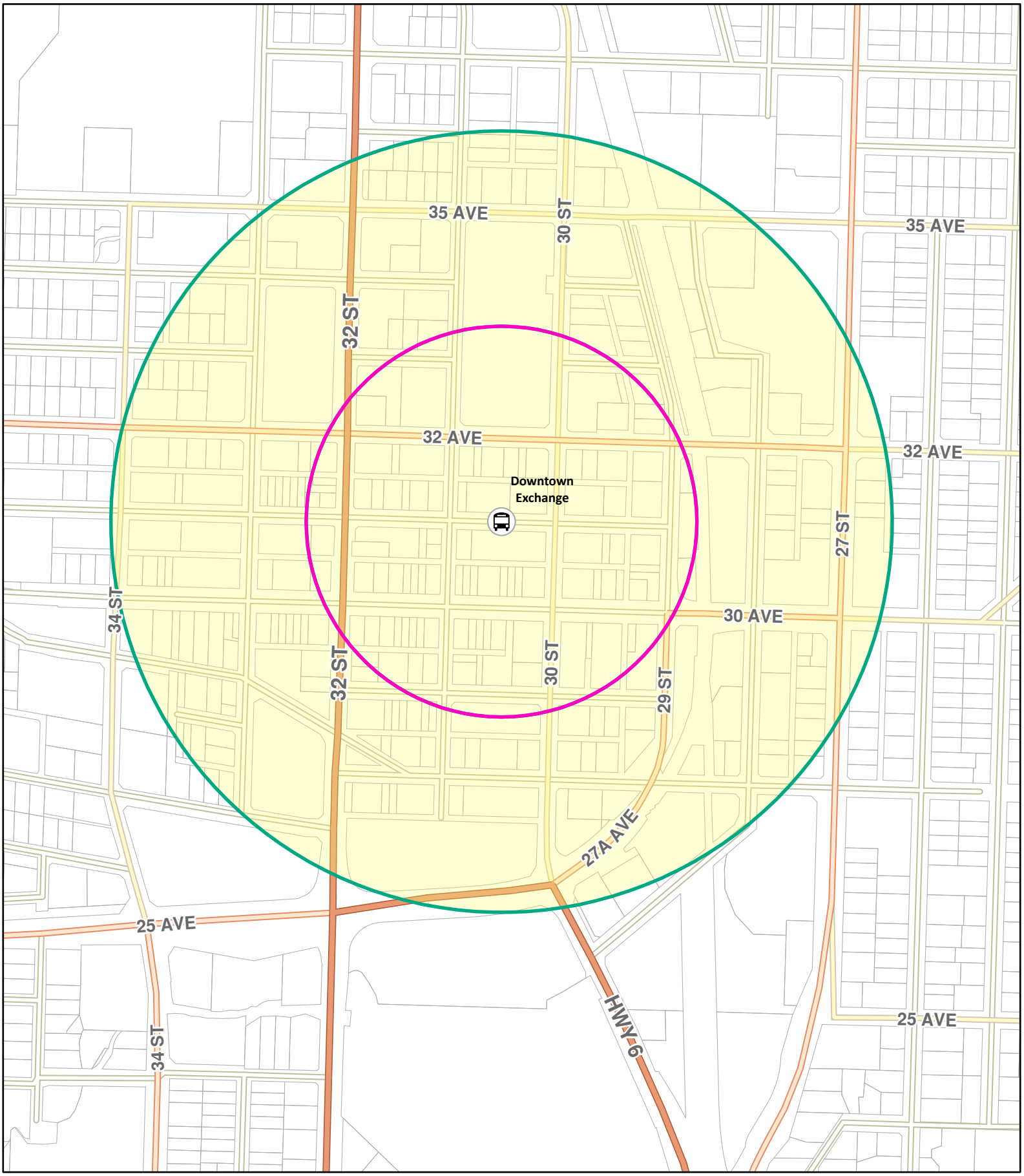

CITY OF Vernon

Data provided from the City of Vernon's GIS is derived from a variety of sources with varying levels of accuracy. The City of Vernon disclaims all responsibility for the accuracy or completeness of the information contained herein.

Schedule B: Transit Oriented Development Areas

Downtown Exchange (bus exchange)

200 metre Tier

400 metre Tier

Bus Exchange

Transit Oriented Area

N

0 75 150

Meters

Scale: 1:5,000

Bylaw: #6000

Date: 4/24/2024

Date Saved: 4/24/2024 Path: G:\8800-9099 GEOGRAPHIC INFORMATION SYSTEMS\8915 MAPS\14 Planning\01 Zoning\ZBL6000\ZBL6000_ScheduleBMaps.aprx

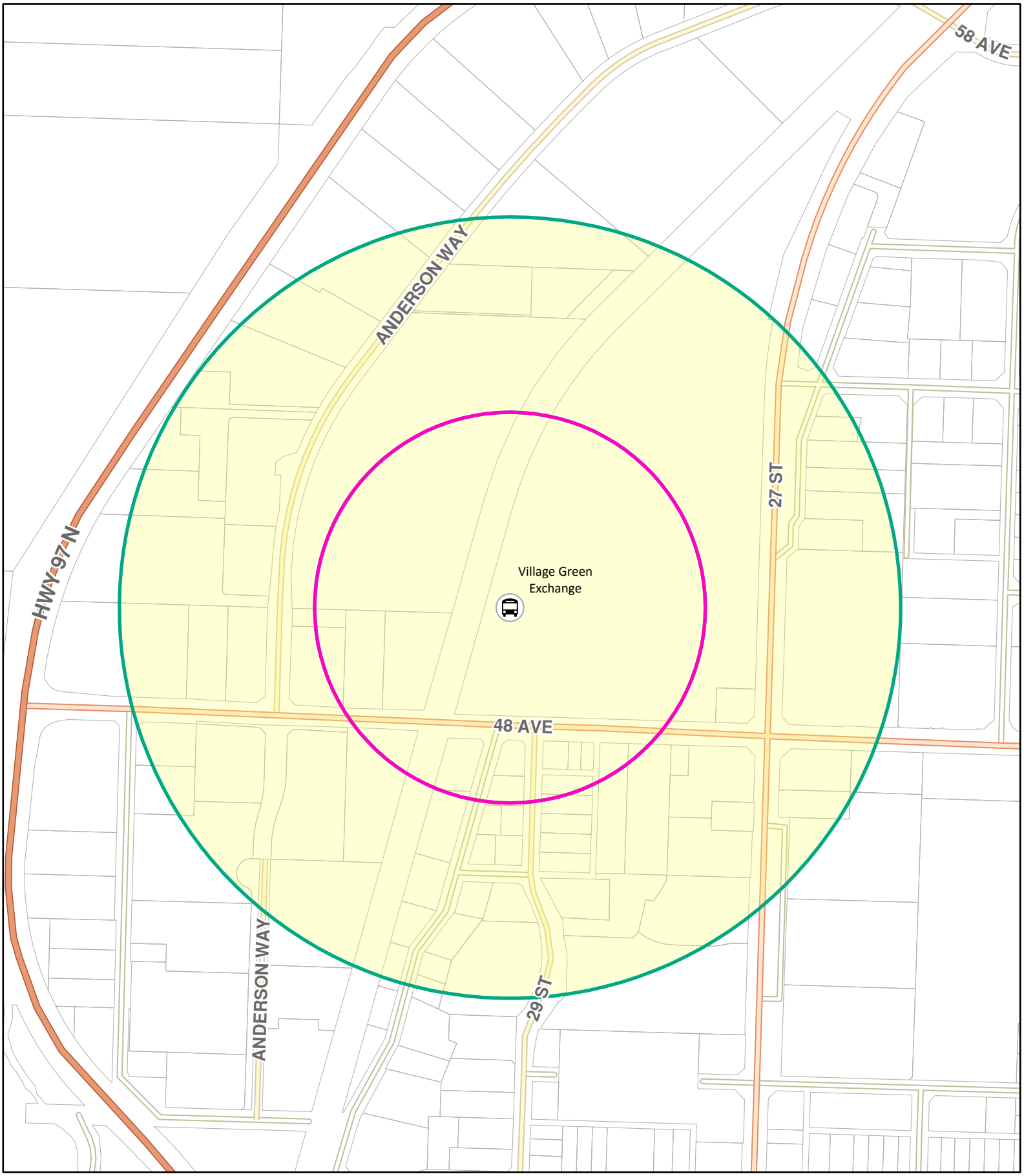

CITY OF Vernon

Data provided from the City of Vernon's GIS is derived from a variety of sources with varying levels of accuracy. The City of Vernon disclaims all responsibility for the accuracy or completeness of the information contained herein.

Schedule B: Transit Oriented Development Areas

Village Green Centre Exchange (bus exchange)

200 metre Tier

400 metre Tier

Bus Exchange

Transit Oriented Area

N

0 75 150

Meters

Scale: 1:5,000

Bylaw: #6000

Date: 4/24/2024

Date Saved: 4/24/2024 Path: G:\8800-9099 GEOGRAPHIC INFORMATION SYSTEMS\8915 MAPS\14 Planning\01 Zoning\ZBL6000\ZBL6000_ScheduleBMaps.aprx